UM001_ECP Series Remote IO Modules User Manual

V1.0

南京欧迪通控制技术有限公司

Nanjing OD Control Technology Co., Ltd.

History Log

NO.	Version	Modification Log	Modifier	Date
1	V1.0	Newly created.	ODControl	2026-05-16
2				
3				
4				
5				

Contents

History Log ..... - 1 -
1 Product Introduction ..... - 1 -
1.1 Product Features ..... - 1 -
1.2 ECP Series Modules ..... - 1 -
1.3 Indicator Light Meaning ..... - 3 -
1.4 Specification Parameters ..... - 5 -
1.4.1 Basic Specification ..... - 5 -
1.4.2 Environmental Specifications ..... - 5 -
1.4.3 Digital Input Specifications ..... - 6 -
1.4.4 Digital Output Specifications ..... - 6 -
1.4.5 Analog Input Specifications ..... - 7 -
1.4.6 Analog Output Specifications ..... - 8 -
1.5 Typical Applications ..... - 9 -
2 Mechanical Installation ..... - 12 -
2.1 Installation Dimensions ..... - 13 -
2.2 Installation Method ..... - 14 -
2.3 Disassembly Method ..... - 14 -
3 Electrical Installation ..... - 16 -
3.1 Wiring Precautions ..... - 16 -
3.2 Cable Selection ..... - 16 -
3.3 Interface Signal Identification ..... - 17 -
3.4 Terminal Wiring ..... - 19 -
3.4.1 Digital Input Wiring ..... - 19 -
3.4.2 Digital Output Wiring ..... - 20 -
3.4.3 Relay Output Wiring ..... - 21 -
3.4.4 Analog Input Wiring ..... - 22 -
3.4.5 Analog Output Wiring ..... - 23 -
3.4.6 Thermal Resistance Temperature Sampling ..... - 23 -
3.4.7 Thermocouple Temperature Sampling ..... - 24 -
4 ECP Series Modules Configuration Parameters ..... - 25 -
4.1 Digital Quantity Configuration Parameters ..... - 25 -
4.1.1 Digital Input Filtering ..... - 25 -
4.1.2 Exceptional Mode of Digital Output ..... - 25 -
4.1.3 Exceptional Output Value of Digital Output ..... - 25 -
4.2 Analog Configuration Parameters ..... - 25 -
4.2.1 Operating Modes and Sampled Values of Analog Inputs ..... - 25 -
4.2.2 Analog Output Mode and Output Value ..... - 26 -
4.2.3 Analog Output Exceptional Mode and Output Value ..... - 26 -
4.3 RTD Configuration Parameters ..... - 27 -

4.3.1 Types of Thermal Resistance - 27 -
4.3.2 Temperature Limit - 27 -
4.3.3 Temperature Upper and Lower Limit Detection - 27 -
4.3.4 Temperature Offset Value - 28 -
4.3.5 Sampling Period - 28 -
4.3.6 Filtering Level - 28 -
4.3.7 Temperature Unit - 28 -
4.4 Thermocouple Configuration Parameters - 29 -
4.4.1 Thermocouple Types - 29 -
4.4.2 Temperature Limit - 29 -
4.4.3 Temperature Upper and Lower Limit Detection - 30 -
4.4.4 Temperature Offset Value - 30 -
4.4.5 Cold Junction Temperature Compensation - 30 -
4.4.6 Sampling Period - 30 -
4.4.7 Filtering Level - 31 -
4.4.8 Temperature Unit - 31 -
5 PDO Mapping - 32 -
5.1 P601-1616N/P602-1616P - 34 -
5.2 P611-AI04S - 35 -
5.3 P612-AO04S - 35 -
5.4 P301-1616N/P302-1616P - 35 -
5.5 P303-3200 - 36 -
5.6 P305-0032N/P306-0032P - 37 -
5.7 P307-2408N/P308-2408P - 38 -
5.8 P309-0008R - 39 -
5.9 P311-AI04S - 40 -
5.10 P312-AO04S - 40 -
5.11 P315-RTD04 - 40 -
5.12 P316-TC04 - 41 -
6 Product Networking Configuration - 42 -
6.1 Expand COP Series Modules - 42 -
6.1.1 Baud Rate Setting - 42 -
6.1.2 ID Setting - 42 -
6.1.3 Terminal Resistor Setting - 43 -
6.2 Alias Address Settings - 43 -
6.3 Firmware Upgrade - 43 -
7 Application in TwinCAT3 - 45 -
7.1 Environment Preparation - 45 -
7.2 Create a Project - 45 -
7.3 Add Device - 46 -
7.3.1 Automatic Scanning - 46 -

7.3.2 Manual Addition ..... - 50 -
7.4 Firmware Upgrade ..... - 52 -
7.5 Alias Address Settings ..... - 54 -
8 Application in Codesys V3.5 ..... - 56 -
8.1 Environment Preparation ..... - 56 -
8.2 Equipment Installation ..... - 56 -
8.3 Create a New Project ..... - 57 -
8.4 Add Device ..... - 58 -
8.4.1 Auto Scanning ..... - 59 -
8.4.2 Manual Configuration ..... - 61 -
8.5 Setting and Usage of Alias Address ..... - 62 -
8.6 Use of Data ..... - 63 -
8.7 Firmware Upgrade ..... - 64 -
9 Using ECP Module with Inovance Compact PLC ..... - 66 -
9.1 Environment Preparation ..... - 66 -
9.2 Create a New Project ..... - 66 -
9.3 Import ESI File ..... - 67 -
9.4 Connect PLC ..... - 68 -
9.5 Add Devices ..... - 69 -
9.6 Use of Data ..... - 70 -
10 Used in Sysmac Studio ..... - 71 -
10.1 Environment Preparation ..... - 71 -
10.2 Create a New Project ..... - 71 -
10.2.1 Connect the Controller ..... - 71 -
10.2.2 Import the ESI File ..... - 72 -
10.3 Add Devices ..... - 73 -
10.3.1 Add ECP01 ..... - 73 -
10.3.2 Add COP Series Modules ..... - 74 -
10.3.3 Node Address Setting ..... - 75 -
10.3.4 Download Settings ..... - 76 -
10.4 Data Usage and Observation ..... - 77 -
11 Used in Xinjie PLC ..... - 79 -
11.1 Add ESI Files Manually ..... - 79 -
11.2 Connect to PLC ..... - 79 -
11.3 Scanning EtherCAT Devices ..... - 82 -
11.4 Data Mapping ..... - 83 -
12 Appendix ..... - 85 -
12.1 Troubleshooting of Common Issues ..... - 85 -
12.2 Conversion Relationships of Temperature Units ..... - 87 -

Safety Precautions and Disclaimer

- **Safety Statement:**

1. Please read the user manual thoroughly before using the ECP series remote IO module.
2. During the installation, operation and maintenance of the product, ensure that all operations will not cause personal injury or equipment damage. Relevant work shall be performed by qualified technical personnel.
3. This product shall be used in an environment that meets the design specifications. Functional abnormalities, equipment damage and other issues caused by failure to comply with relevant regulations are not covered by the product quality warranty.
4. Our company shall not assume any legal liability for safety accidents, property losses and other consequences arising from improper operation of this product.

- **Safety Tip:**

1. When disassembling, assembling and wiring the product, ensure the operations will not cause any safety hazards.
2. On the premise of no safety risks, it is recommended to disconnect all external power supplies of the system before performing disassembly, assembly and wiring operations.
3. During installation, wiring and maintenance, prevent metal scraps, wire ends and other conductive debris from falling into the equipment interior, as this may lead to equipment damage, malfunctions and incorrect operation.
4. After installation, ensure good heat dissipation and ventilation for the equipment to avoid abnormal operation.
5. Secure the equipment firmly during installation; improper installation may result in product falling off, unstable operation and other abnormal conditions.
6. Wiring shall comply with basic electrical safety principles, and installation and maintenance operations such as wiring and connection shall be performed by professional personnel with sufficient electrical knowledge.

- **Disclaimer**

Due to the continuous update and improvement of products and technologies, the content in this document will be updated alongside actual products and may contain discrepancies. Please refer to the corresponding product version or the actual product for accuracy.

We reserve the right to modify the content due to product upgrades and updates without prior notice.

- **Warranty Statement**

Under normal use, if the product malfunctions or gets damaged, OD Control Technology will provide warranty service within the warranty period (please refer to the order form for the product warranty period). Repair fees will be charged for products out of warranty.

Within the warranty period, repair fees will be charged for product damage caused by the following circumstances.

- Product damage caused by failure to operate in accordance with the provisions in the manual.
- Product damage caused by use beyond the specified scope of the product.
- Product damage caused by using this product for non-intended functions.
- Product damage caused by fire, flood, or abnormal power supply such as voltage fluctuation.
- Product damage caused by force majeure events (natural disasters, earthquakes, lightning strikes).

- **Copyright Statement**

Copyright © Nanjing OD Control Technology Co., Ltd. 2026. All rights reserved.

The copyright of this material belongs to Nanjing OD Control Technology Co., Ltd. Without the written permission of the Company, no entity or individual may arbitrarily excerpt, reproduce, modify or translate this material, nor disseminate it in any form.

Infringement will be prosecuted.

1 Product Introduction

The ECP series EtherCAT coupler products can build an EtherCAT network with each other via EtherCAT interfaces. They can also connect COP series modules through the CAN interface on the coupler body to form flexible hardware configurations, meeting diverse application requirements. A single EtherCAT coupler can be expanded with up to 4 COP series modules.

1.1 Product Features

The ECP series modules are EtherCAT coupler products. They manage COP series IO modules via the local CAN bus and function as EtherCAT remote slaves with configurable resources for various expansion interfaces. Key features are as follows:

- Supports the expansion and combination of up to 4 COP modules.
- The device composed of the coupler and expansion modules serves as a single independent EtherCAT network node.
- Automatically generates the configuration of actually connected modules without manual configuration by users, ensuring easy operation.
- The coupler module achieves a data refresh cycle of 125μs.
- Supports mailbox synchronization and distributed clock synchronization functions.
- Enables alias setting for EtherCAT nodes.
- COP series expansion modules can set the priority of module data transmission via ID configuration.
- The communication distance between expansion modules and the coupler can reach 25 meters, allowing decentralized module installation, simplifying wiring and reducing wiring costs.
- With a module thickness of 21.5mm and 32 IO interfaces, it supports close-mounted installation, saving 20% of cabinet space compared with mainstream plug-in IO modules on the market.

1.2 ECP Series Modules

Model Description:

P601	-	16	16	N
①		②	③	④

Copyright © Nanjing OD Control Technology Co., Ltd.

① Product No.: The unique code of the product

② Number of digital input channels, displayed as a decimal value

③ Number of digital output channels, displayed as a decimal value

④ Type of output port, N: NPN type / sink type, P: PNP type / source type

P611 - AI 04 S

① ② ③ ④

① Product No.: The unique code of the product

② Module signal types: AI stands for analog input signal, and AO stands for analog output signal

③ Number of channels: Expressed as a decimal value

④ Signal types: S: Single-ended differential, D: True differential

The ECP series modules include multiple signal type modules for users to choose from. For detailed specifications of ECP series product models, please refer to the list:

Product No.	Module	Description
P601-1616N	ECP01	16-channel NPN/PNP digital input and 16-channel NPN digital output module
P602-1616P	ECP02	16-channel NPN/PNP digital input, 16-channel PNP digital output module
P611-AI04S	ECP11	4-channel analog input module, supporting current and voltage signal input
P612-AO04S	ECP12	4-channel analog output module, supporting voltage and current signal output

*More types of modules are being added.

1.3 Indicator Light Meaning

The appearance and structure of the ECP series modules are shown in the figure.

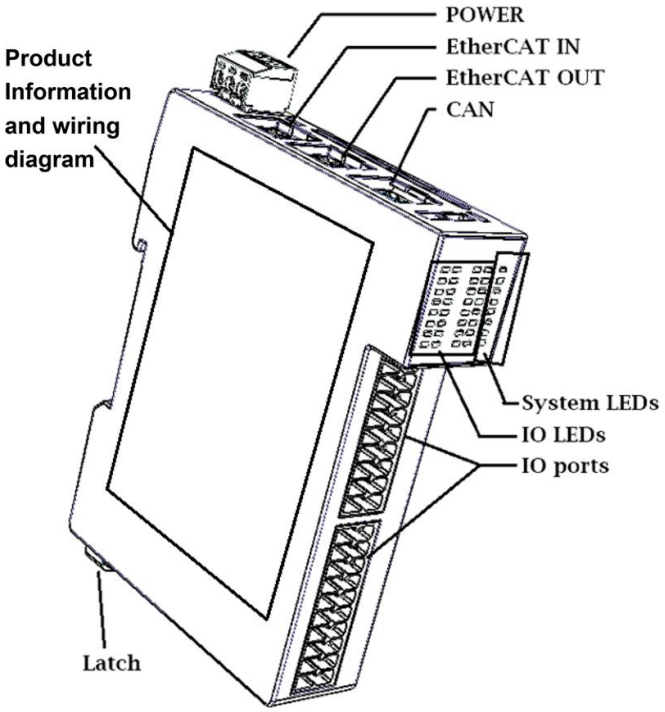

Figure 1 ECP Series Module

The LED indicators of the ECP series modules include the indicators on the front of the product, which are used to show the system operating status and the working status of IO ports, as well as the LED indicators on the RJ45 interfaces. These consist of Link (yellow) and Active (green) for EtherCAT interfaces, and RUN (green) and ERR (yellow) for CAN interfaces.

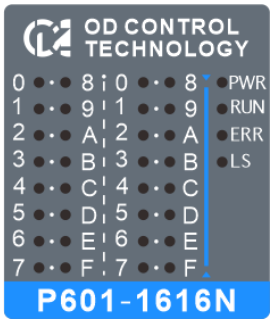

Figure 2 LED indicators

LED	Meaning
PWR	Power indicator light, green. The light turns on after power is connected.
RUN	EtherCAT running indicator light, green. OFF: In initialization state Blinking: Blinking at 1Hz frequency, in pre-operational state

LED	Meaning
	ON: In operational state Single flash: Illuminates for 200ms and extinguishes for 1s, in safe operational state Fast flash: 2.5Hz, in Bootstrap state
ERR	EtherCAT error indicator light, red. OFF: EtherCAT communication is in normal state Blinking: Received unexecutable state transition commands Single flash: Network disconnection, synchronization error Double flash: EtherCAT communication transmission watchdog error.
LS	Local Expansion Bus Communication Status Indicator: a) OFF: Uninitialized, initial state after power-on reset. No modules connected. b) Fast flashing: 2.5Hz, 200ms ON, 200ms OFF, I/O module scanning and detection process c) Steady on: Normal operation after modules are detected, no errors d) Single flash: 200ms ON, 1s OFF, expansion module lost e) Flashing: 10Hz, 50ms ON, 50ms OFF, TE-Bus communication error
EtherCAT Active	The indicator light on the RJ45 network port is green and blinks during data transmission.
CAN RUN	CAN bus operating status indicator, green. OFF: In initialization state, the device is not started normally. Slow flashing: Lights for 200ms and turns off for 200ms cyclically, in pre-operation state. Fast flashing: Lights for 50ms and turns off for 50ms cyclically, in Stopped state. ON: In operating state.
CAN ERR	Yellow indicator for CAN bus error status. Off: In initialization state, the device fails to start normally. Slow flashing: Lights for 200ms and extinguishes for 200ms, in pre-operation state. Fast flashing: Lights for 50ms and extinguishes for 50ms, in Stopped state. Steady on: In operating state.
IO LEDs	Used for digital input and output indication, "On" indicates the "active" state, and "Off" indicates the "inactive" state. For other types of signal indications, refer to the instructions of the specific module for the meaning of the indicators.
Analog Channel Status Indicator Light	The analog channel status indicator light is used to indicate the analog input channel. ON: The channel is working normally OFF: The channel connection is open-circuited

1.4 Specification Parameters

1.4.1 Basic Specification

Applicable Products	P601	P602	P611	P612
Product Name	EtherCAT Coupler IO Module			
Rated Current	50mA	50mA	40mA	140mA
Gross Weight	100g	100g	95g	95g
Size (mm)	（Height × Depth × Width）106 x 85 x 21.5			
Data Refresh Cycle	⩾125us			
Working Mode	SM synchronization, DC synchronization			
Mailbox Data Length	inputs：128 bytes Outputs：128 bytes			
Node Address	0~65535			
Mailbox	Emergency Frame and SDO Request			
Power Supply	DC24V±20%			
Transmission Cable	Ethernet/EtherCAT CAT5/CAT5e cable			
Bus Interface	2 x RJ45，100Mbps			
Transmission Distance	⩽100m			
Relative Humidity	⩽95%，no condensation			
Protection Grade	IP20			
Certification	CE			

1.4.2 Environmental Specifications

Applicable Products	P601	P602	P611	P612
Installation/Usage Environment	Environment without conductive dust, conductive fibers, flammable/explosive dust, no flammable gas, corrosive dust or corrosive gas, no water mist, oil contamination, conductive liquid or gas, no severe vibration and repeated impact.			
Altitude	⩽2000m			
Overvoltage Category	CAT I			
ESD	Level 3, Contact Discharge: ±6kV，Air Discharge: ±8kV, Criteria A（IEC61000-4-2）			
EFT	Signal lines: ±2kV, Power supply lines: ±4kV, Criteria A（IEC61000-4-4）			
SURGE	Power：line-to-line:±1kV, line-to-PE: ±2kV, Criteria A（IEC61000-4-5）			
Vibration Resistance	1g, EN60068-2-6:2008			
Shock Resistance	15g, EN60068-2-27:2009			
Operating Temperature and Humidity	Temperature：-20℃~+60℃ Humidity：＜95%RH（30℃），no condensation			
Storage Temperature and Humidity	Temperature：-20℃~+65℃ Humidity：＜95%RH（30℃），no condensation			
Transport Temperature and Humidity	Temperature：-40℃~+70℃ Humidity：＜95%RH（40℃），no condensation			

1.4.3 Digital Input Specifications

Applicable Products	P601	P602
Input Type	Digital Input	
Input method	Source/Sink Type	
Number of Input Channels	16	
Input Voltage Level	24V DC±20%（19.2VDC ~28.8VDC）	
Input Current	Typical value：3.8mA @24VDC	
Input ON Voltage	⩾15V	
Input OFF Voltage	⩽4V	
Hardware Response Time	T_{ON}/T_{OFF}: 100us/100us	
Input Protection	Optocoupler isolation, etc.	
Status Indicator	The indicator light turns on when the input is valid.	

1.4.4 Digital Output Specifications

Applicable Products	P601	P602
Output Type	Low-side output	High-side output
Output Method	Sink type	Source type
Number of Output Channels	16	16
Output Voltage Level	24V DC±20%（19.2VDC ~28.8VDC）	
Output Load	Single channel supports a maximum current output of 1A, and each group with 4 channels supports a maximum output of 1.5A @24VDC.	
Hardware Response Time	T_{ON}/T_{OFF}: 100us/100us	
Isolation Method	Optocoupler Isolation	
Output Protection	Supports short-circuit and overcurrent protection for channels. The output of the corresponding channel will be shut off once overcurrent or short-circuit occurs. The output will resume output if the abnormality disappeared.	
Status Indicator	The indicator light turns on when the output is valid.	

When the output drive current is in a high-temperature environment, derating is required. The derating curve is shown in the figure below.

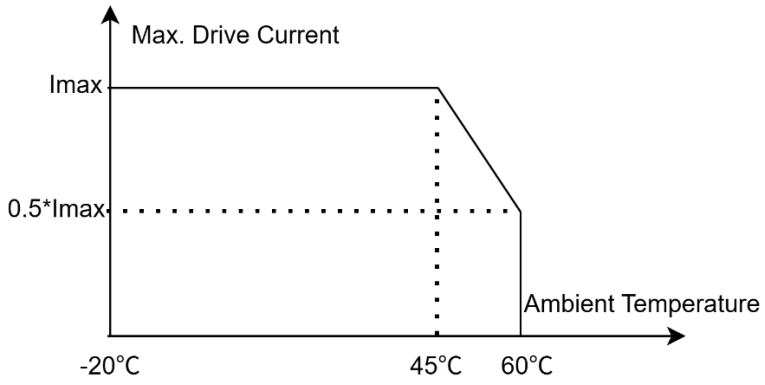

1.4.5 Analog Input Specifications

Applicable Products	P611
Input Type	Analog input
Input Method	Voltage-type / Current-type
Number of Input Channels	4
Resolution	16bits
Convert time	50μs per channel
Input Voltage Range	Optional Settings: ±10V (Default Setting) , 0~10V, ±5V, 0~5V, 1~5V
Input Impedance	>1MΩ
Voltage Sampling Accuracy	±0.1%
Voltage Input Limit	±15V
Voltage Input Diagnosis	When the voltage input range is set to 1~5V, disconnection detection is supported.
Input Current Range	Optional Settings:±20mA, 0~20mA, 4~20mA
Current Sampling Accuracy	±0.1%
Current Sampling Impedance	250Ω
Current Input Limit	±30mA (Instantaneous)
Current Input Diagnosis	Set the current input range to 4~20mA, supporting open-circuit detection.
Input Protection	No isolation between interface channels, while isolation is provided between interfaces, power supply and communication components.
Status Indicator	The LED light turns off when the connection is disconnected.

Relationship Table of Analog Input Signal Types and Sampling Feedback Data:

Signal Type	Input Signal Range	Rated feedback value range	Sampling limit range	Limit feedback value range
Voltage-type	-10V ~ +10V	-32000 ~ +32000	-10.20V ~ +10.20V	-32640 ~ +32640
	0V ~ +10V	0 ~ +32000	-0.20V ~ +10.20V	-640 ~ +32640
	-5V ~ +5V	-32000 ~ +32000	-5.10V ~ +5.10V	-32640 ~ +32640

Signal Type	Input Signal Range	Rated feedback value range	Sampling limit range	Limit feedback value range
	0V ~ +5V	0 ~ +32000	-0.10V ~ +5.10V	-640 ~ +32640
	1V ~ +5V	0 ~ +32000	0.8V ~ +5.08V	-1600 ~ +32640
Current-mode	4mA~+20mA	0 ~ +32000	3.2mA~+20.32mA	-1600 ~ +32640
	0mA~+20mA	0 ~ +32000	-0.4mA~+20.40mA	-640 ~ +32640
	-20mA~+20mA	-32000 ~ +32000	-20.40mA~+20.40mA	-32640 ~ +32640

1.4.6 Analog Output Specifications

Applicable Products	P612
Output Type	Analog Output
Output Mode	Voltage-type / Current-type
Number of output channels	4
Resolution	16bits
Convert Time	50μs/Channel
Output Voltage Range	Optional Settings：±10V（Default Settings）, 0~10V, ±5V, 0~5V, 1~5V
Output Impedance	1kΩ
Voltage Output Accuracy	±0.1%（Full range and full temperature range）
Voltage Output Limit	±15V
Output Current Range	Optional settings: 0~20mA, 4~20mA
Current Output Accuracy	±0.1%(Full range, full temperature range)
Current Output Load	0~600Ω
Output Protection	No isolation between interface channels, while isolation is implemented between interfaces and the power supply as well as communication parts.
Status Indicator	It will be OFF if the connection is disconnected or go out of Operational state.

Relationship Table of Analog Output Signal Types and Output Digital Quantity Data:

Signal Type	Input Signal Range	Rated feedback value range
Voltage-type	-10V ~ +10V	-32000 ~ +32000
	0V ~ +10V	0 ~ +32000
	-5V ~ +5V	-32000 ~ +32000
	0V ~ +5V	0 ~ +32000
	1V ~ +5V	0 ~ +32000
Current-mode	0mA~+20mA	0 ~ +32000
	4mA~+20mA	0 ~ +32000

1.5 Typical Applications

The ECP series EtherCAT slave modules can be easily connected to the EtherCAT network and jointly build a control system with the EtherCAT master. The ECP series EtherCAT slave modules can expand COP series product modules through the local CAN bus interface, realizing the expansion of different interface resources of a single EtherCAT slave station.

The COP series products can be connected to controllers/PLCs that support the CANopen master station, enabling the expansion of remote modules and facilitating flexible configuration of hardware interface resources with ease.

Users can flexibly select the expansion method according to the communication interface supported by the controller in use. Its typical application topology is shown in the figure.

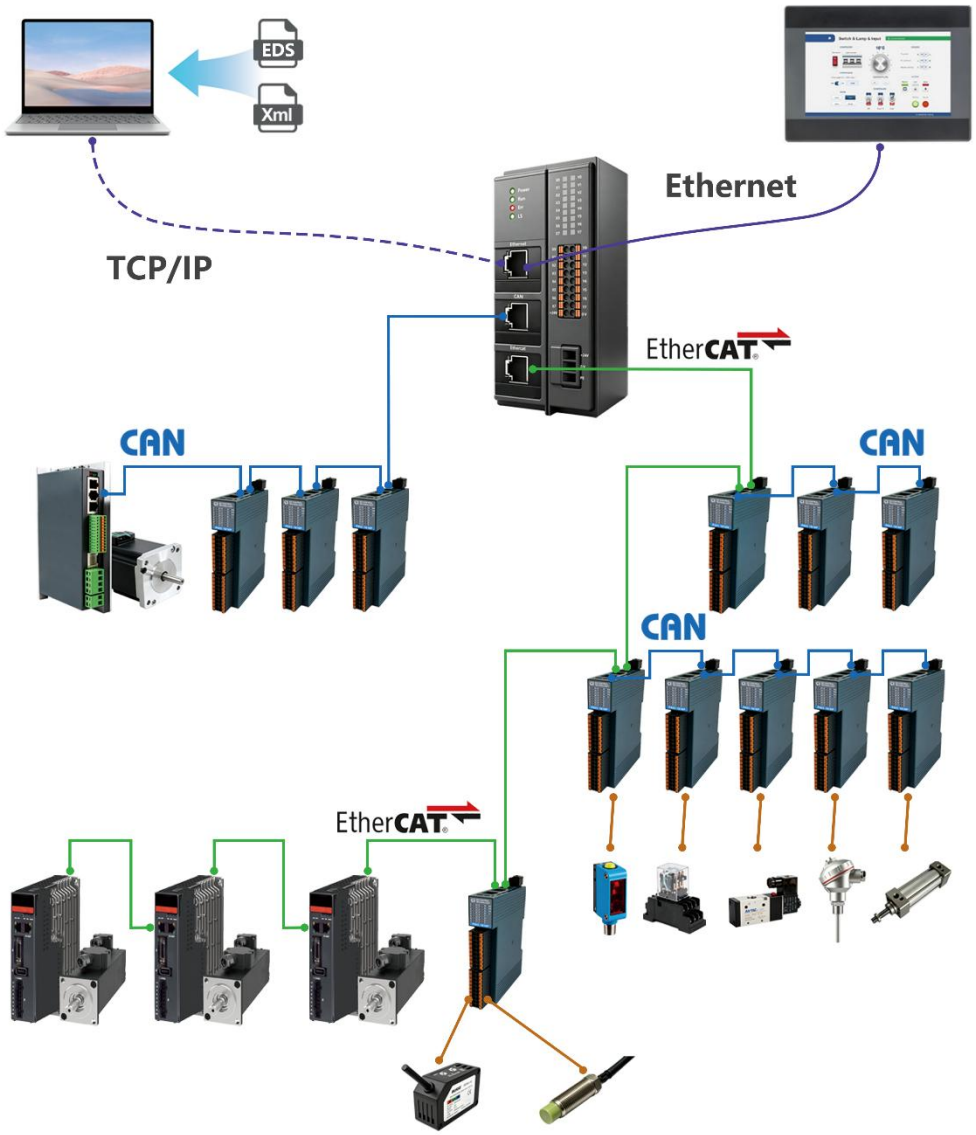

Figure 3 Typical Application Topology

When ECP series modules connect to an EtherCAT master station (usually a PLC), they can not only be used independently as standalone EtherCAT IO slave devices, but also expand ECP or other EtherCAT slave devices via the EtherCAT OUT interface. Additionally, the CAN interface of ECP modules can be used to expand COP modules, enabling ECP devices to achieve more abundant and flexible IO configuration. The internal terminal resistance of the CAN network is enabled by default for the CAN interface of ECP devices. The RUN and ERR indicator lights of the CAN interface reflect the network status of the expanded COP module.

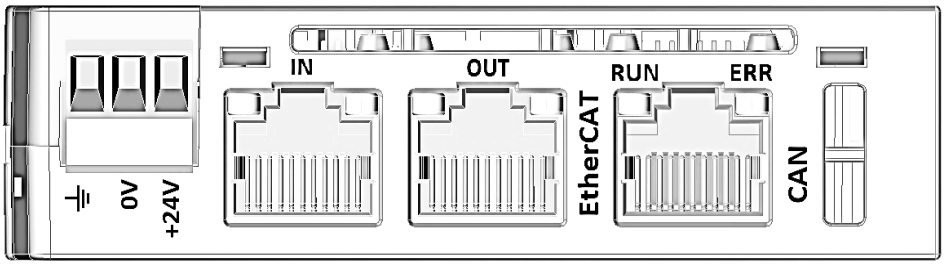

Figure 4 Top signal interface of the ECP module

When expanding with COP series modules, it is required to set the node ID, baud rate Bd and termination resistor R via the DIP switch on the top of the module. Setting principles:

- The baud rate Bd must be set to be consistent with the CAN baud rate of the CAN master. The CAN baud rate of ECP series modules is 1 Mbps, so both DIP switches for the baud rate setting of the connected COP module shall be set to OFF.
- Within the same CAN network, the ID must be set to a unique value without duplication. The smaller the ID, the higher the priority during data communication.
- When the module is located at the terminal of the CAN network, set the termination resistor to ON (for Bus network connection, the other termination resistor is usually enabled in the CAN master).

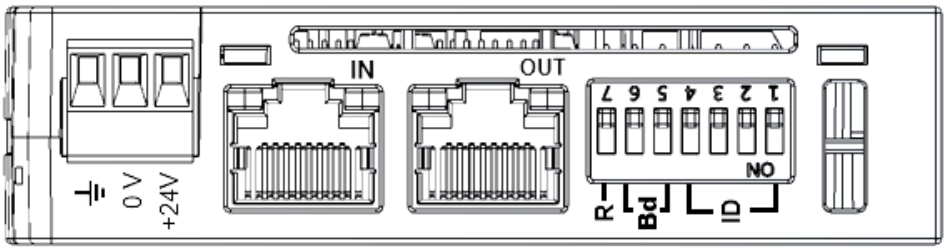

Figure 5 Top signal interface of the COP module

2 Mechanical Installation

For ECP series and COP series products, attention shall be paid to the environmental and protection requirements of the modules during installation. Recommendations are as follows:

- It is recommended to install the module in an electrical cabinet with protection against dust, moisture and pollution
- Ensure good ventilation inside the electrical cabinet
- Choose an installation location away from overheating equipment
- Install the module vertically and keep the surrounding air circulating (with a clearance of more than 10mm around)
- After installing the module, install rail fixings at both ends to secure it firmly
- Cut off the power supply before installing or disassembling the module.

To meet the requirements of equipment ventilation, heat dissipation and reserved wiring space, a certain gap shall be reserved during product installation to facilitate the installation, operation and disassembly of the equipment. Taking the installation of equipment on horizontal guide rails as an example, refer to the figure below.

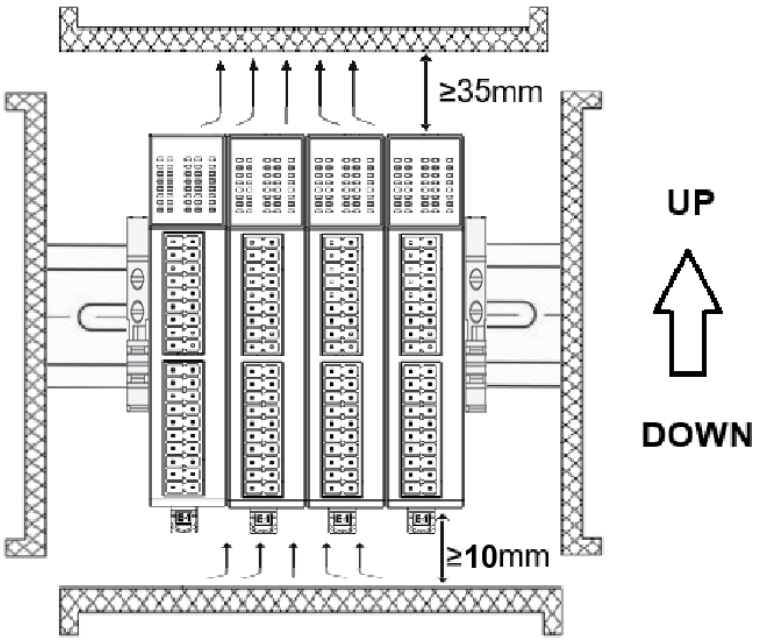

Figure 6 Installation clearance requirements between the module and surrounding components

The ECP series modules adopt DIN rail mounting. The DIN rail shall comply with the EN60715 standard (width: 35mm, thickness: 1mm). The dimensional information of the DIN rail is shown in the figure below.

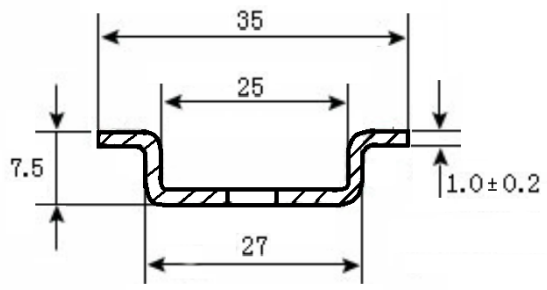

Figure 7 DIN rail dimension information

To ensure the equipment is securely mounted on the DIN rail, it is recommended to add rail fasteners.

2.1 Installation Dimensions

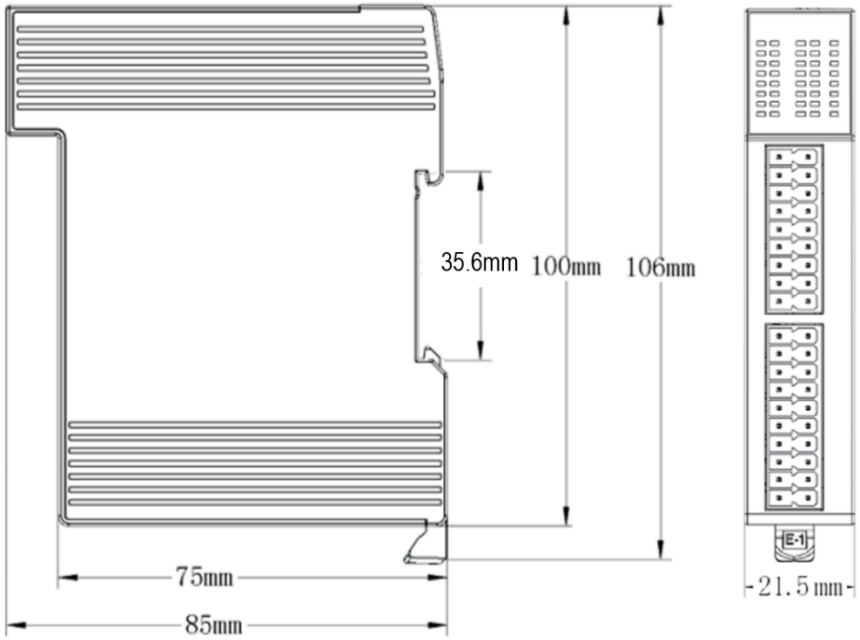

Figure 8 ECP/COP Product Installation Dimension Drawing

Appropriate space shall be reserved above the product according to the selected network cable plug. A 10mm clearance shall be reserved below the product to accommodate the opening travel of the DIN rail buckle.

2.2 Installation Method

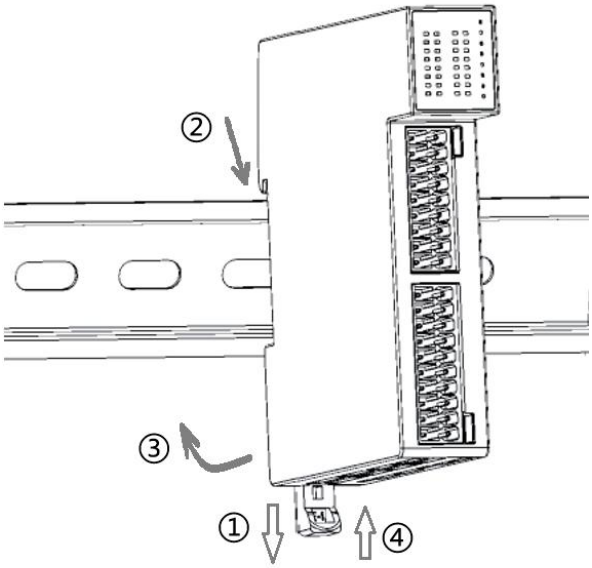

Figure 9 Installation Method

The module installation process is shown in the following steps:

- Step ①: Pull out the buckle at the lower end of the module to retract it into the housing and keep it in an open state.
- Step ②: Clip the upper end of the module onto the DIN rail.
- Step ③: Rotate the module to make the movable buckle end fit closely against the rail.
- Step ④: Press the lower rail buckle to lock the movable buckle onto the rail.

A click sound will be heard when pulling or pressing the rail buckle, indicating it has entered the locked/open state.

Do not pull or press the rail buckle with excessive force.

2.3 Disassembly Method

The procedure for removing the module from the DIN rail is the reverse of the installation procedure. The removal steps are as follows:

- Step ①: Lift the DIN rail buckle to release it from the DIN rail.
- Step ②, ③: Rotate the module upward with the fixed buckle end as the fulcrum, and move the fixed end upward to disengage the module from the top of the DIN rail, completing the removal.

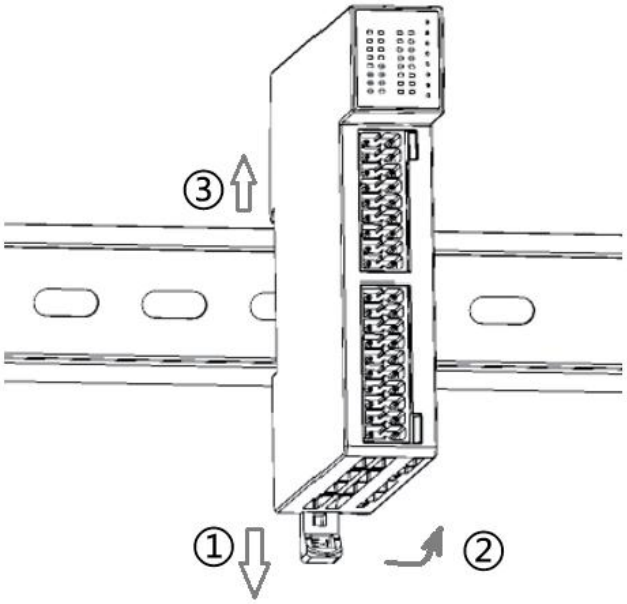

Figure 10 Module Disassembly

If the installation space at the lower end of the module does not allow the buckle to be pulled open by hand, use a screwdriver to pry it open.

Do not pull or press the module forcibly during disassembly.

3 Electrical Installation

3.1 Wiring Precautions

EMC (Electromagnetic Compatibility) issues fall into the category of system-level problems. Even if a product is designed to meet operating conditions for harsh environments, reasonable external wiring and routing still need to be considered in practical use to reduce interference between devices.

Please pay attention to the following matters during the electrical connection of the system:

- Please adopt the recommended cable specifications. For extended cables, shielded cables are recommended to improve anti-interference capability.
- When connecting communication cables to network ports, insert them firmly into the ports until fully locked. Secure the cables to avoid excessive stress at the network port connections.
- Route communication cables and signal wires separately from high-interference cables such as power cables (high voltage, high current), and avoid parallel routing.
- During electrical wiring, keep away from harsh environments with high temperature, high humidity, dust, oil contamination and corrosive substances.
- For wiring near equipment generating severe noise or interference, take measures to mitigate the impact of noise sources, such as placing the equipment or lines inside a metal enclosure.
- When both system power supply and IO power supply are required, pay attention to their mutual interference. It is recommended to adopt measures such as using independent power supplies, adding isolation transformers or filters.
- When using shielded cables, keep the unshielded section as short as possible, and connect the shielding braid to the nearest PE terminal.
- Follow relevant electrical codes and regulations of each country or region for grounding measures. The grounding terminal must be reliably grounded, and shall not be shared with the power neutral N terminal.

3.2 Cable Selection

The selection of IO cables is limited by the signal current passing through the IO terminals. The table below lists the supported cables. Users shall reasonably select the wire gauge and cable type according to actual application conditions and signal current parameters.

Applicable wire diameter		Recommended stripping length（unit：mm）	Recommended models of tubular pin-type crimp terminals
GB Standard /mm^2	American Standard /AWG		
0.3	22	8/10	E0308/E0310
0.5	20	10	E0510
0.75	18	10	E7510

1.0	18	10	E1010
1.5	16	10	E1510

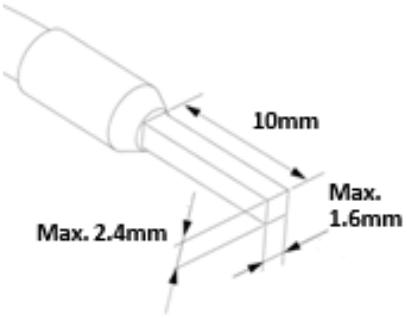

Figure 11 Stripping Requirements for Module Wiring

For terminals with high-current output such as DO output signals, when selecting cables, it is necessary to choose cables with an appropriate wire diameter based on the actual maximum operating current.

EtherCAT communication cables adopt standard RJ45 network interfaces and standard crystal connectors, and shielded Category 5e or higher twisted-pair cables shall be used. The cable specification requirements are shown in the table below:

Parameter Item	规格说明
Cable Type	CAT5/CAT5ecable (100BASE-TX)
Shielding Circuit Requirements	Double-layer shielding (SFTP or SFTPP), textile mesh shielding coverage of 85%, aluminum foil layer coverage of 100%
Compliant with standards	EIA/TIA568A，EN50173，ISO/IEC11801
Work Environment Requirements	Operating Temperature: -30℃~60℃ Determine the requirements for corrosion resistance and fatigue resistance according to the working environment.
Conductor cross-section	AWG26 and above

3.3 Interface Signal Identification

The interface signal definitions of the ECP series products adopt unified naming conventions. Any discrepancies will be specified in the corresponding individual product documentation.

Please refer to the table below for the signal identifiers and their definitions of the products.

Interface	Signal Marking	Signal Meaning
Power supply	+24V	Connect to the +24V power supply provided by the switching power supply
	0V	Connect the +24V switching power supply to the corresponding COM port or 0V interface.
	PE/⏚	Protective Earthing

Interface	Signal Marking	Signal Meaning
EtherCAT	IN	The network access interface of EtherCAT devices For the pin signal definition of RJ45 network cable interface, please refer to the standard definition of EtherCAT signal interface.
	OUT	For the network egress interface of EtherCAT devices, please refer to the standard definition of EtherCAT signal interfaces for the pin signal definition of RJ45 network cable interfaces.
CAN	CAN	CAN communication interface adopts RJ45 interface, and the pin signal definition is as follows: 1: CAN_H 2: CAN_L 3: GND Metal shell: PE
DI	DI_x	Digital input signal x, the number of DI ports of the device shall not exceed 16.
	DI_xx	Digital input signal xx, the number of DI points of the device exceeds 16.
	24V	Connect to the +24V power supply provided by the switching power supply
	COM/0V	Connect the switching power supply to the COM port or 0V interface corresponding to the +24V power supply.
	COMx	"x" is a digit ranging from 0 to 9, representing the common terminal of a signal. Different values of x mean the common terminals are independent of each other, indicating there are multiple isolated signal common terminals. For instance, by adopting different connection modes of the common terminals for the digital input module, the same device can realize signal acquisition of both NPN (sink type) and PNP (source type).
DO	DO_x	Digital output signal x, the number of DO ports of the device shall not exceed 16.
	DO_xx	Digital output signal xx, the number of DOs of the device exceeds 16.
	24V	Connect to the +24V power supply provided by the switching power supply
	COM/0V	Connect the switching power supply to the COM port or 0V interface corresponding to the +24V power supply.
AI	Vx+	Access point for the positive terminal of voltage-type or current-type signals
	VIx-	Negative terminal access point for voltage-type or current-type signals
	Ix+	Access point for positive terminal of current-type signal
	Ix-	Negative terminal access point for current-type signal
	PE	Protective Earthing
AO	Vx+	Positive terminal of voltage-type output signal
	Ix+	Positive terminal of current-type output signal
	VIx-	Negative terminal of voltage-type or current-type signal
	PE	Protective Grounding
	+24V	Connect to the +24V power supply provided by the switching power supply
	COM/0V	Connect the +24V switching power supply to the corresponding COM port or 0V interface.

* In the signal name, "x" represents a one-digit hexadecimal value ranging from 0 to F, which is generally used to indicate the sequence of signals.

* "xx" in the signal name represents a two-digit hexadecimal value ranging from 00 to FF, which is generally used to indicate the sequence of signals.

3.4 Terminal Wiring

When wiring the device, users shall refer to the device manual and complete signal connection in accordance with the product signal markings and the wiring methods of various signals described in this section. Do not wire randomly to avoid abnormal use, which may cause equipment damage or resulting losses.

3.4.1 Digital Input Wiring

Modules with digital input interfaces adopt bidirectional optocouplers for internal isolation. If equipped with 16 input ports, there are two common terminals (marked as COMx, where x represents different digits to distinguish different common terminals). This allows users to connect to different common terminals and realize the access of two sets of input signals of different types (NPN and PNP). For modules with more digital input interfaces, more common terminals can be configured (generally one common terminal is shared by 8 DI input interfaces). Users can access different types of input signals according to application requirements. The wiring diagram is shown as follows:

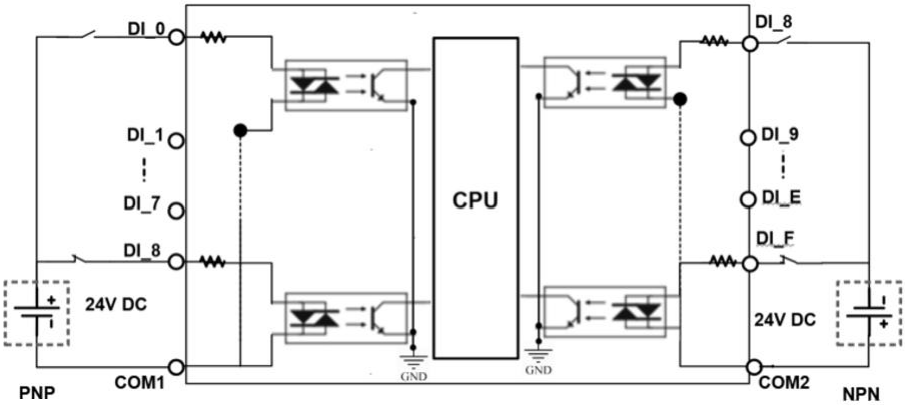

Figure 12 Wiring for NPN/PNP compatible input

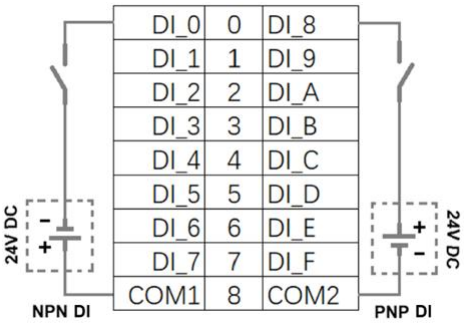

Figure 13 Wiring and Signal Definition of Digital Input Terminals

3.4.2 Digital Output Wiring

For NPN (sink type) output signals, a 2×10 terminal interface is adopted, providing two sets of wiring ports for power signals. The 24V terminals of the two power supplies are connected together, and the 0V terminals are also connected together, which enables a more stable power circuit and higher current support. The wiring is shown in the figure below:

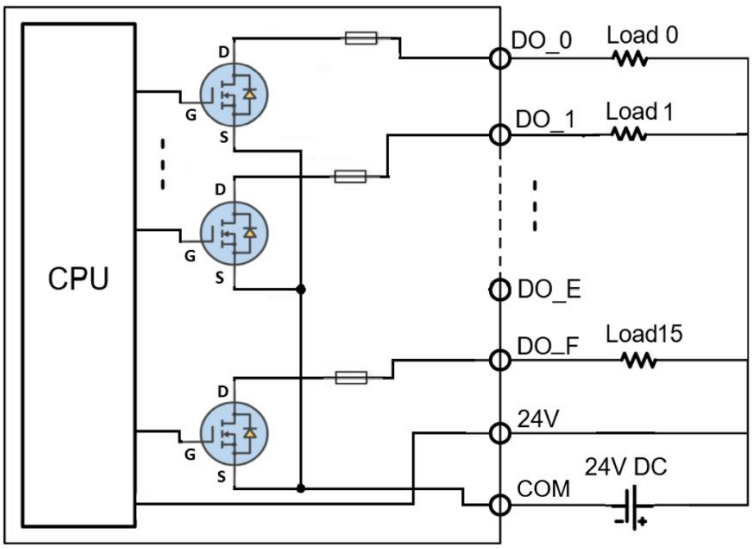

Figure 14 Wiring of NPN type (sink type) output

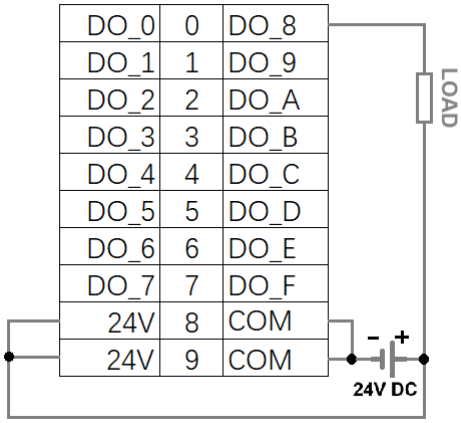

Figure 15 Wiring and Signal Definition of 20PIN NPN Output Terminals

The wiring of PNP-type (sourcing) digital output signals is shown in the figure below.

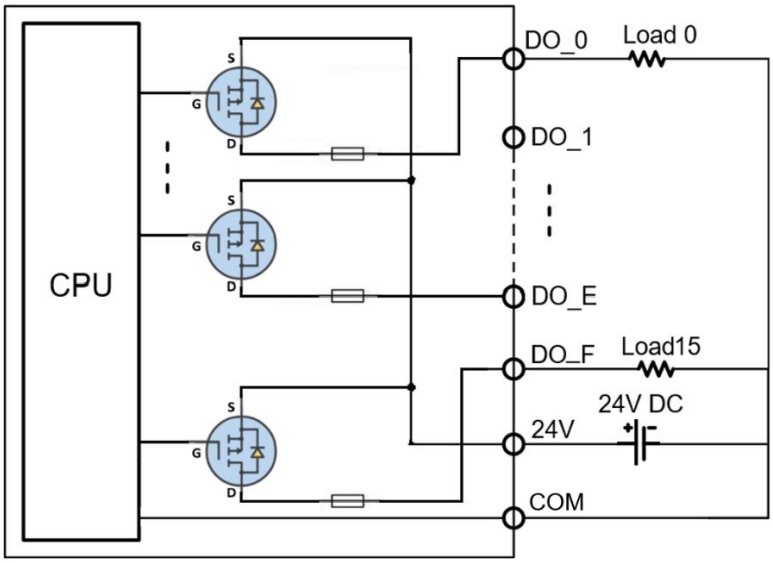

Figure 16 Wiring of PNP (sourcing) Output

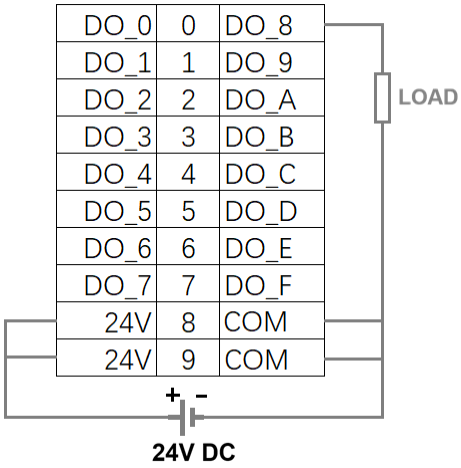

Figure 17 Wiring and Signal Definition of 20PIN 18PIN PNP Output Terminals

3.4.3 Relay Output Wiring

Relay output modules use single-pole single-throw normally open contact relays to control the disconnection and closure of digital output ports. When an output port is active, the relay closes, and the output terminal serves as a dry contact. The power supply for each group of relays can be independently selected as DC or AC. When a DC power supply is chosen, the common terminal can be connected to either the positive or negative pole, and the specific connection shall be selected according to application requirements.

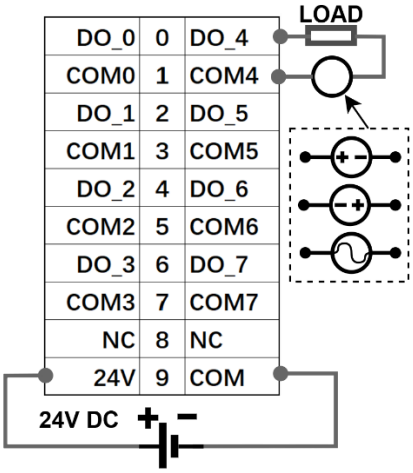

Figure 18 Relay Output Wiring Diagram

3.4.4 Analog Input Wiring

Analog input acquisition modules usually support the input of voltage-type and current-type signals. During use, it is necessary to check whether the input signal exceeds the signal acquisition range of the module. Do not connect out-of-range signals to the module, exceeding the module's tolerance limit may cause damage to the module.

Taking the four-channel analog input module as an example, its wiring is shown in the figure below.

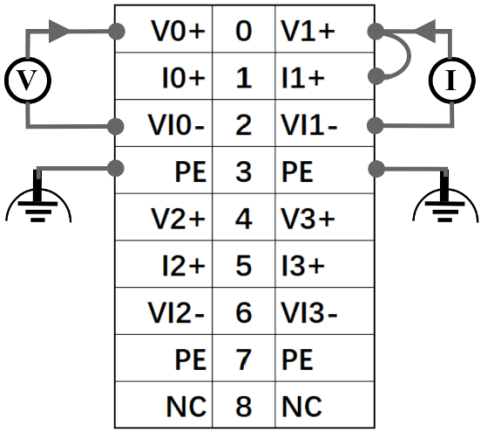

Figure 19 Analog Input Signal Wiring Diagram

The connected voltage or current signal must fall within the module's measurable voltage or current range, otherwise, the module may be damaged.

To ensure signal stability and avoid interference, use shielded, low-impedance cables for signal transmission and reliably ground the cables.

3.4.5 Analog Output Wiring

Analog output modules usually support the output of voltage-type and current-type signals. Taking the four-channel analog input module as an example, its wiring is shown in the figure below.

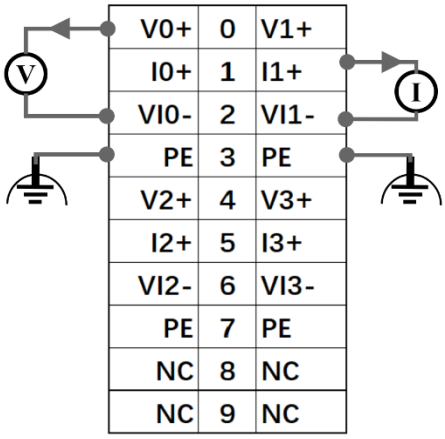

Figure 20 Analog Output Signal Wiring Diagram

All four channels support both current output and voltage output functions. Users shall select either the voltage output terminal or the current output terminal according to the operating mode of the channel, and the two types of terminals must not be mixed, otherwise, inaccurate output signals may occur. Additionally, a single channel must not be connected to both current output and voltage output simultaneously, as this may cause channel damage.

For signal stability and to avoid interference, use shielded, low-impedance cables for signal transmission and ensure the cables are properly grounded.

3.4.6 Thermal Resistance Temperature Sampling

The thermal resistance temperature sampling module supports the connection of three-wire and two-wire thermal resistors. Users shall confirm whether the module is compatible with the thermal resistance sensor in use before connection.

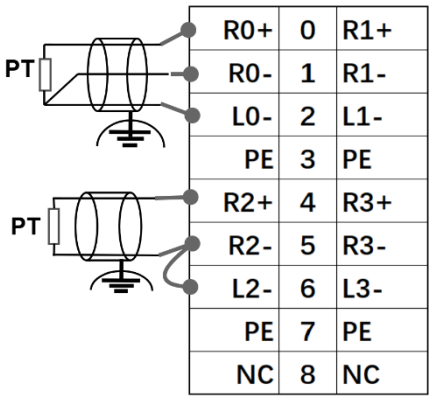

Figure 21 Wiring Diagram of Thermal Resistance Input Signal

Considering signal stability and avoiding the impact of interference, please use shielded and low-impedance cables for signal transmission and ensure reliable grounding of the cables.

Before the thermal resistance module operates, confirm that the sensor type parameters configured for the module are consistent with the type of sensor in use.

3.4.7 Thermocouple Temperature Sampling

Thermocouple temperature sampling modules usually require cold junction compensation to obtain accurate detected temperature values. Users can adopt a PT100 thermal resistor to measure and compensate the cold junction temperature. If no PT100 thermal resistor is connected for cold junction temperature measurement, the module will detect an open circuit of the thermal resistor and use the terminal temperature for cold junction temperature compensation.

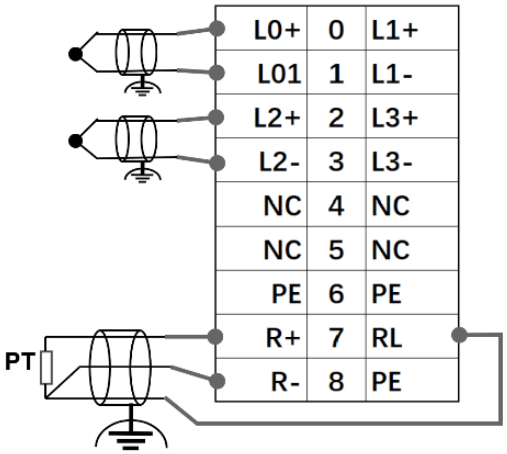

Figure 22 Thermocouple Input Signal Wiring Diagram

When using a thermistor sensor as the cold junction temperature compensation sensor, connect the thermistor to R+ and R- during wiring, and short-circuit R- to RL. For signal stability and to avoid interference, use shielded, low-impedance cables for signal transmission and ensure the cables are reliably grounded.

Before the thermocouple module operates, confirm that the sensor type parameters configured for the module match the type of sensor in use.。

4 ECP Series Modules Configuration Parameters

This section mainly introduces that modules are connected via the ECP series and configured and operated through the EtherCAT bus. When modules communicate directly with the master device via the CAN bus, please refer to the subsequent chapters and the CiA401 standard.

In this section, the symbol "?" represents the slot position where the module is located. For example, the "?" of P601 is 0. Among modules expanded via the CAN bus, the module with the smallest ID has its "?" set to 1, and the value increases sequentially as 2, 3, ... according to the ID number.

4.1 Digital Quantity Configuration Parameters

4.1.1 Digital Input Filtering

For digital input ports, when the module acts as an expansion module of ECP01, the EtherCAT master station can configure the filtering function via object dictionary 0x80?1. For the variable corresponding to this object, bit0 corresponds to the filtering setting of digital input 0, bit1 corresponds to digital input 1, ..., and bit N corresponds to the filtering setting of digital input N. When set to 1, the filtering function of the input port is enabled, providing a 6ms filtering effect (signals with a width less than 6ms will not be detected).

4.1.2 Exceptional Mode of Digital Output

For digital output ports, when the module acts as an expansion module of ECP01, the EtherCAT master station can use the object dictionary 0x80?2 to configure how the output port state is handled when exiting the OP state. Bit0 of the variable corresponding to this object is mapped to digital output 0, Bit1 to digital output 1, ..., and Bit N to the exceptional output configuration of digital output N. The default setting is 1, which means the output port will adopt the corresponding value in 0x80?3 when exiting the OP state. When set to 0, the port output will maintain its current state.

4.1.3 Exceptional Output Value of Digital Output

For digital output ports, when the module acts as an expansion module of ECP01, the EtherCAT master station can use object dictionary 0x80?3 to set the output state of the output ports when exiting the OP state with the port output mode set to 1. Bit0 of the variable corresponding to this object corresponds to the exceptional output setting of digital output 0, bit1 corresponds to digital output 1, ..., and bit N corresponds to the abnormal output setting of digital output N.。

4.2 Analog Configuration Parameters

4.2.1 Operating Modes and Sampled Values of Analog Inputs

The analog input module supports multiple operating modes, which can be configured via object dictionary 0x80?5:00. This object is a 16-bit value, with each group of four bits corresponding to one input

channel in sequence (e.g., Bit3..0 configures the operating mode of the AI_0 channel, and Bit7..4 configures the operating mode of the AI_1 channel). The default operating mode of each channel is voltage type with a range of -10V to +10V.

	Values of 4-bit	Working Mode	Sample Value
Voltage-type	B0000	-10 V ~ +10 V	-32000~+32000
	B0001	0 ~+10 V	0~32000
	B0010	-5 V ~+5 V	-32768~+32000
	B0011	0 ~ +5 V	0~32000
	B0100	1~ +5V	0~32000
Current-type	B0101	4~20mA	0~32000
	B0110	0~20mA	0~32000
	B0111	-20~+20mA	-32000 ~ +32000
	其它	保留	/

? represents the slot position where the module is located. For example, the ? of P601 is 0. Among modules expanded via the CAN bus, the module with the smallest ID has its ? set to 1, and the value of ? is assigned as 2, 3, and so on in ascending order of ID.

4.2.2 Analog Output Mode and Output Value

For analog output ports, when the module acts as an expansion module of ECP01, the EtherCAT master station can set the analog output value of the output port upon exiting the OP state via the object dictionary 0x80?6. Subindex 1 corresponds to analog output channel 0, subindex 2 corresponds to analog output channel 1, and so on.

Signal Type	Values of 4-bit	Input Signal Range	Feedback Value Range
Voltage-type	B0000	-10V ~ +10V	-32000 ~ +32000
	B0001	0V ~ +10V	0 ~ +32000
	B0010	-5V ~ +5V	-32000 ~ +32000
	B0011	0V ~ +5V	0 ~ +32000
	B0100	1V ~ +5V	0 ~ +32000
Current-type	B0101	4mA~+20mA	0 ~ +32000
	B0110	0mA~+20mA	0 ~ +32000
	其它	保留	/

The analog output module supports multiple operating modes, which can be configured via object dictionary 0x80?5:00. This object is a 16-bit value, with each group of four bits corresponding to one input channel in sequence (for example, Bit3..0 is used to set the operating mode of the AO_0 channel, and Bit7..4 is used to set the operating mode of the AI_0 channel). The default operating mode of each channel is voltage type with a range of -10V to +10V.。

4.2.3 Analog Output Exceptional Mode and Output Value

During the operation of the analog output module, when it exits the Operational state due to detected

hardware faults or communication network anomalies, the output state of the output channels can be configured via the fail-safe output mode object 0x8?02 and the fail-safe output value object 0x8?06.

The default value of the fail-safe output mode is 1, which means the output will adopt the value configured in the fail-safe output value object when an exception occurs. When set to 0, the output value will maintain its current output state upon the occurrence of an abnormality

4.3 RTD Configuration Parameters

4.3.1 Types of Thermal Resistance

The thermal resistance temperature detection module supports multiple types of thermal resistance sensors. If the sensor connected by the user is not a PT100 sensor, it is necessary to set the actual sensor type connected to the channel via object dictionary 0x80?5:00. This object is a 16-bit value, with every four bits corresponding to one input channel in sequence (for example, Bit3..0 can set the operating mode of Channel 0, and Bit7..4 can set the operating mode of Channel 1).

Value table corresponding to different types:

Sensor Type	Corresponding value
PT100	B0000
PT500	B0001
PT1000	B0010
Cu100	B0011
KTY84	B0100

Example: Connect Channel 0 and Channel 2 to PT100, Channel 1 to PT1000, and Channel 3 to Cu100. In this case, set 0x80?5 to 0x3010.

4.3.2 Temperature Limit

The temperature limit includes the upper temperature limit and the lower temperature limit, both of which default to 0 upon power-up. The temperature represented by the value V is calculated as T = 0.1℃ × V.

If users need to check whether module detection channel N (N=0,1,2,3) exceeds the upper or lower limit, they shall configure the required limit values for the corresponding channels by setting the 16-bit signed data of sub-index 2(N+1)+1 (upper temperature limit) and sub-index 2(N+1)+2 (lower temperature limit) in the object dictionary 0x80?7. For example, to set the upper and lower limit values of channel 2, it is necessary to configure sub-index 5 and sub-index 6.

4.3.3 Temperature Upper and Lower Limit Detection

When users need module temperature upper and lower limit detection, after setting the temperature upper and lower limit detection values, it is required to enable the temperature upper and lower limit detection via the object dictionary 0x80?8:00. This object adopts 16-bit unsigned data, with each bit

corresponding to the upper and lower limit detection enable of one channel. For instance, if bit 0 is set to 1, the upper and lower limit detection function of channel 0 is enabled, when a bit is set to 0, the temperature upper and lower limit detection of the corresponding channel is disabled. Unrelated bits shall be written as 0 during operation.

Normally, the enable of temperature upper and lower limit detection shall be activated only after the configuration of temperature upper limit and lower limit values is completed.。

4.3.4 Temperature Offset Value

Users can set the offset value of the temperature feedback for all module channels via the object dictionary 0x80?9:00, for example, for calibration purposes. The setting range of this temperature offset value is -500.0℃ to +500.0℃, corresponding to a sampling temperature feedback value calibration range of -5000 to +5000. At the user level, this function can be used for sampling value calibration or offset adjustment.

The temperature offset value defaults to 0 after power-on. Its unit changes in accordance with the temperature unit setting, equivalent to 0.1 Units of the temperature unit.

4.3.5 Sampling Period

The temperature sampling period of the thermal resistance module is updated once every 250ms by default (4 channels). If users need to adjust the sampling period, it can be set via the object dictionary 0x80?A:00. Currently, the module supports three sampling periods. Users may select the required sampling period according to the table below and configure the corresponding object dictionary.

Sampling Period	Set value
250ms	0 （Default value）
500ms	1
1000ms	2

4.3.6 Filtering Level

Temperature sampling results can obtain smoother sampling data through filtering. Users can adjust the smoothness of temperature sampling results by setting the filtering level via the object dictionary 0x80?1:00. The setting range of this integer value is 0~9, with a default value of 2.

4.3.7 Temperature Unit

Thermal resistance sampling temperature unit setting. The default value is 0, which means the temperature unit is ℃.

Object	Data type	RW attribute	Parameter Description
0x80?B:00	Unsigned16	RW	The sampling of each RTD temperature channel is used for target temperature unit configuration. The default value is 0, the unit is °C, and the setting range is 0~2.

The relationship between the value of the temperature unit setting object and the temperature unit:

Temperature unit	Set value
Degree Celsius °C	0 (Default value)
Degree Fahrenheit °F	1
Kelvin K	2

4.4 Thermocouple Configuration Parameters

4.4.1 Thermocouple Types

The thermocouple temperature detection module supports multiple types of thermocouple sensors. If the user connects a sensor other than the K-type, it is necessary to set the actual sensor type connected to the channel via the object dictionary 0x80?5:00. This object is a 32-bit value, with every four bits corresponding to one input channel in sequence (for example, Bit3..0 can set the operating mode of Channel 0, and Bit7..4 can set the operating mode of Channel 1).

Value table corresponding to different types:

Sensor Type	Corresponding value
K	B0000
B	B0001
E	B0010
N	B0011
J	B0100
R	B0101
S	B0110
T	B0111

Example: If channel 0 and channel 2 are connected to type K, channel 1 to type B, and channel 3 to type T, set 0x80?5 to 0x7020 at this time.

4.4.2 Temperature Limit

The temperature limit includes the upper temperature limit and the lower temperature limit, both of which are initialized to 0 after power-on. The temperature indicated by its value V is calculated as T = 0.1℃ * V.

If users need to check whether Module Detection Channel N (N=0,1,2,3) exceeds the upper or lower limit, they shall set the required limit values for the corresponding channel by configuring the 16-bit signed data of Sub-index 2(N+1)+1 (upper temperature limit) and Sub-index 2(N+1)+2 (lower temperature limit) in the object dictionary 0x80?7. For example, to set the upper and lower limit values of Channel 2, it is required to configure Sub-index 5 and Sub-index 6.

4.4.3 Temperature Upper and Lower Limit Detection

When the user needs to perform module temperature upper and lower limit detection, after setting the temperature upper and lower limit detection values, it is required to enable the temperature upper and lower limit detection via the object dictionary 0x80?8:00. This object is 16-bit unsigned data, with each bit corresponding to the upper and lower limit detection enable of one channel. For example, setting bit 0 to 1 enables the upper and lower limit detection function of channel 0. If a bit is set to 0, the temperature upper and lower limit detection of the corresponding channel is disabled. Unrelated bits shall be written as 0 during operation.

Generally, the enable of temperature upper and lower limit detection shall be activated only after the configuration of temperature upper limit and lower limit values is completed.

4.4.4 Temperature Offset Value

Users can set the offset value of the temperature feedback for all module channels via the object dictionary 0x80?9:00, for purposes such as calibration. The setting range of this temperature offset value is -500.0℃ to +500.0℃, corresponding to a calibration range of -5000 to +5000 for the sampled temperature feedback values. At the user level, this function can be used for sampled value calibration or offset adjustment.

The temperature offset value defaults to 0 upon power-up. The temperature offset value applies to the temperature sampling values of all channels on the module. Its unit changes in line with the temperature unit setting, equivalent to 0.1 Units of the temperature unit.

4.4.5 Cold Junction Temperature Compensation

During temperature measurement with the thermocouple module, cold junction temperature compensation is required to eliminate errors caused by the cold junction temperature. The thermocouple module provides one RTD cold junction temperature detection loop for the purpose of cold junction temperature compensation.

When the RTD port is unused or not connected, the cold junction temperature for compensation will adopt the temperature at the terminal connection end, and the cold junction temperature measurement is realized by the internal temperature sensor of the module.

4.4.6 Sampling Period

The temperature sampling period of the thermocouple module is updated every 250ms by default (4 channels). If users need to adjust the sampling period, it can be set via the object dictionary 0x80?A:00. Currently, the module supports three sampling periods. Users can select the required sampling period according to the table below and configure the corresponding object dictionary.

Sampling Period	Set value
250ms	0
500ms	1

Sampling Period	Set value
1000ms	2

4.4.7 Filtering Level

Temperature sampling results can obtain smoother sampling data through filtering. Users can adjust the smoothness of temperature sampling results by setting the filtering level via the object dictionary 0x80?1:00. The setting range of this integer value is 0~9, with a default value of 2.

4.4.8 Temperature Unit

Thermocouple sampling temperature unit setting. The default value is 0, which means the temperature unit is ℃.

Object	Data type	RW attribute	Parameter Description
0x80?B:00	Unsigned16	RW	The sampling of each RTD temperature channel is used for target temperature unit configuration. The default value is 0, the unit is °C, and the setting range is 0~2.

Relationship between the value of the temperature unit setting object and the temperature unit:

Temperature unit	Set value
Degree Celsius °C	0 (Default value)
Degree Fahrenheit °F	1
Kelvin K	2

5 PDO Mapping

For the ECP series modules and COP series modules extended via the CAN bus, the real-time sampling data of the modules interacts with the EtherCAT master station in the form of PDOs. TxPDO refers to the data sent from the slave module to the master station, which is usually sampling data and status information; RxPDO refers to the data sent from the master station to the slave module, which is generally control data such as output value setting.

The table below illustrates the PDO data of ECP series modules and extended COP series modules.

Module	RxPDO Data Size	TxPDO Data Size	Comments
P601-1616N	2Bytes	2Bytes	RxPDO data sets the output status of 16-channel DO. The 2-byte data value corresponds to the status of DO0~DOF from the least significant bit to the most significant bit. 1 means the output channel is on, and 0 means the output channel is off. TxPDO data feeds back the input status of 16-channel DI. The 2-byte data value corresponds to the input level status from the least significant bit to the most significant bit. 1 indicates high level, and 0 indicates low level.
P602-1616P	2Bytes	2Bytes	
P611-AI04S	0	8Bytes	TxPDO feeds back the sampling values of four AI channels, with each sampling value being 16 bits. Every two bytes correspond to the sampling value of one channel, arranged sequentially from Channel 0 to 3.
P612-AO04S	8Bytes	0	The RxPDO configures the output of four AO channels with a 16-bit output value. Every two bytes correspond to the output value of one channel, arranged sequentially from Channel 0 to 3.
P301-1616N	2Bytes	2Bytes	RxPDO data sets the output status of 16-channel DO. The 2-byte data value corresponds to the status of DO0~DOF from the low bit to the high bit. 1 means the output channel is on, and 0 means the output channel is off. TxPDO data feeds back the input status of 16-channel DI. The 2-byte data value corresponds to the input level status from the low bit to the high bit. 1 indicates high level, and 0 indicates low level.
P302-1616P	2Bytes	2Bytes	
P303-3200	0	4Bytes	TxPDO data feeds back the input status of 32-channel DI. The 4-byte data value corresponds to the level status of DI0 to DI1F from the low bit to the high bit, where 1 represents a high level and 0 represents a low level.
P305-0032N	4Bytes	0	The RxPDO data sets the output status of 32-channel DO. The 4-byte data value corresponds to the status of DO0~DO1F from the least significant bit to the most significant bit. 1 means the output channel is on, and 0

Module	RxPDO Data Size	TxPDO Data Size	Comments
			means the output channel is off.
P306-0032P	4Bytes	0	The RxPDO data sets the output status of 32-channel DO. The 4-byte data value corresponds to the status of DO0 to DO1F from the low bit to the high bit. 1 means the output channel is ON, and 0 means the output channel is OFF.
P307-2408N	1Byte	3Bytes	RxPDO data sets the output status of 8-channel DO. The 1-byte data value corresponds to the status of DO0~DO7 from the least significant bit to the most significant bit. 1 means the output channel is on, and 0 means the output channel is off. TxPDO data feeds back the input status of 24-channel DI. The 3-byte data value corresponds to the input level status from the least significant bit to the most significant bit. 1 indicates a high level, and 0 indicates a low level.
P308-2408P	1Byte	3Bytes	
P309-0008R	1Byte	0	The RxPDO data configures the output status of 8-channel relays. The 1-byte data value corresponds to the status of DO0 to DO7 from the least significant bit to the most significant bit. 1 means the output channel is on, and 0 means the output channel is off. The TxPDO data feeds back the input status of 24-channel DI.
P311-AI04S	0	8Bytes	TxPDO feeds back the sampling values of four AI channels, and each sampling value is 16 bits. Every two bytes correspond to the sampling value of one channel, arranged sequentially from Channel 0 to 3.
P312-AO04S	8Bytes	0	The RxPDO configures the output of four AO channels with a 16-bit output value. Every two bytes correspond to the output value of one channel, arranged sequentially from Channel 0 to 3.
P315-RTD04	0	12Bytes	TxPDO feeds back the temperature sampling values of four channels of RTD, each occupying 2 Bytes, as well as the status word of each of the four RTD channels.
P316-TC04	0	15Bytes	The TxPDO feeds back four-channel TC temperature sampling values and one-channel cold-junction compensation RTD temperature sampling values. Each temperature sampling value occupies 2 Bytes, and each TC and RTD has a 1-Byte status word.

PDO Mapping (Process Data Object Mapping) is used to map the process data object dictionary required for communication. The mapping types are divided into RxPDO Mapping and TxPDO Mapping, with their index ranges being 0x1600-0x17FF and 0x1A00-0x1BFF respectively.

5.1 P601-1616N/P602-1616P

The RxPDO mapping object is 0x1600+n = 0x1600 (where n is slot number 0). The data type of 0x7000:01~10 is BOOL, and each subindex corresponds to a digital output channel.

Index	0x1600+n			
Subindex	Name	Data type	RW	Default value
0	Number of entries	USINT	RO	16
1	Digital Output 0	UDINT	RO	0x70000101
2	Digital Output 1	UDINT	RO	0x70000201
3	Digital Output 2	UDINT	RO	0x70000301
4	Digital Output 3	UDINT	RO	0x70000401
5	Digital Output 4	UDINT	RO	0x70000501
6	Digital Output 5	UDINT	RO	0x70000601
7	Digital Output 6	UDINT	RO	0x70000701
8	Digital Output 7	UDINT	RO	0x70000801
9	Digital Output 8	UDINT	RO	0x70000901
A	Digital Output 9	UDINT	RO	0x70000A01
B	Digital Output A	UDINT	RO	0x70000B01
C	Digital Output B	UDINT	RO	0x70000C01
D	Digital Output C	UDINT	RO	0x70000D01
E	Digital Output D	UDINT	RO	0x70000E01
F	Digital Output E	UDINT	RO	0x70000F01
10	Digital Output F	UDINT	RO	0x70001001

The TxPDO mapping object is 0x1A00+n = 0x1A00 (where n is slot number 0). The data type of 0x6000:01~10 is BOOL, and each subindex corresponds to a digital input channel.

Index	0x1A00+n			
Subindex	Name	Data type	RW	Default value
0	Number of entries	USINT	RO	16
1	Digital Input 0	UDINT	RO	0x60000101
2	Digital Input 1	UDINT	RO	0x60000201
3	Digital Input 2	UDINT	RO	0x60000301
4	Digital Input 3	UDINT	RO	0x60000401
5	Digital Input 4	UDINT	RO	0x60000501
6	Digital Input 5	UDINT	RO	0x60000601
7	Digital Input 6	UDINT	RO	0x60000701
8	Digital Input 7	UDINT	RO	0x60000801
9	Digital Input 8	UDINT	RO	0x60000901
A	Digital Input 9	UDINT	RO	0x60000A01
B	Digital Input A	UDINT	RO	0x60000B01
C	Digital Input B	UDINT	RO	0x60000C01
D	Digital Input C	UDINT	RO	0x60000D01

Index	0x1A00+n			
Subindex	Name	Data type	RW	Default value
E	Digital Input D	UDINT	RO	0x60000E01I
F	Digital Input E	UDINT	RO	0x60000F01
10	Digital Input F	UDINT	RO	0x60001001

5.2 P611-AI04S

The TxPDO mapping object is 0x1A00+n = 0x1A00 (where n is slot number 0). The data type of 0x6000:01~04 is INT, and each sub-index corresponds to an analog input channel.

Index	0x1A00+n			
Subindex	Name	Data type	RW	Default value
0	Number of entries	USINT	RO	4
1	Analog Input 0	UDINT	RO	0x60000110
2	Analog Input 1	UDINT	RO	0x60000210
3	Analog Input 2	UDINT	RO	0x60000310
4	Analog Input 3	UDINT	RO	0x60000410

5.3 P612-AO04S

The RxPDO mapping object is 0x1600+n = 0x1600 (where n is slot number 0). The data type of 0x7000:01~04 is INT, and each subindex corresponds to an analog output channel.

Index	0x1600+n			
Subindex	Name	Data type	RW	Default value
0	Number of entries	USINT	RO	4
1	Digital Output 0	UDINT	RO	0x70000110
2	Digital Output 1	UDINT	RO	0x70000210
3	Digital Output 2	UDINT	RO	0x70000310
4	Digital Output 3	UDINT	RO	0x70000410

5.4 P301-1616N/P302-1616P

The RxPDO mapping object is 0x1600+n = 0x160n (n stands for the slot number). For 0x70n0:01~10, the data type is BOOL, and each subindex corresponds to a digital output channel.

Index	0x1600+n			
Subindex	Name	Data type	RW	Default value
0	Number of entries	USINT	RO	16
1	Digital Output 0	UDINT	RO	0x70n00101
2	Digital Output 1	UDINT	RO	0x70n00201
3	Digital Output 2	UDINT	RO	0x70n00301
4	Digital Output 3	UDINT	RO	0x70n00401
5	Digital Output 4	UDINT	RO	0x70n00501
6	Digital Output 5	UDINT	RO	0x70n00601

Index	0x1600+n			
Subindex	Name	Data type	RW	Default value
7	Digital Output 6	UDINT	RO	0x70n00701
8	Digital Output 7	UDINT	RO	0x70n00801
9	Digital Output 8	UDINT	RO	0x70n00901
A	Digital Output 9	UDINT	RO	0x70n00A01
B	Digital Output A	UDINT	RO	0x70n00B01
C	Digital Output B	UDINT	RO	0x70n00C01
D	Digital Output C	UDINT	RO	0x70n00D01
E	Digital Output D	UDINT	RO	0x70n00E01
F	Digital Output E	UDINT	RO	0x70n00F01
10	Digital Output F	UDINT	RO	0x70n01001

The TxPDO mapping object is 0x1A00+n = 0x1A0n (where n stands for the slot number). For 0x60n0:01~10, the data type is BOOL, and each subindex corresponds to a digital input channel.

Index	0x1A00+n			
Subindex	Name	Data type	RW	Default value
0	Number of entries	USINT	RO	16
1	Digital Input 0	UDINT	RO	0x60n00101
2	Digital Input 1	UDINT	RO	0x60n00201
3	Digital Input 2	UDINT	RO	0x60n00301
4	Digital Input 3	UDINT	RO	0x60n00401
5	Digital Input 4	UDINT	RO	0x60n00501
6	Digital Input 5	UDINT	RO	0x60n00601
7	Digital Input 6	UDINT	RO	0x60n00701
8	Digital Input 7	UDINT	RO	0x60n00801
9	Digital Input 8	UDINT	RO	0x60n00901
A	Digital Input 9	UDINT	RO	0x60n00A01
B	Digital Input A	UDINT	RO	0x60n00B01
C	Digital Input B	UDINT	RO	0x60n00C01
D	Digital Input C	UDINT	RO	0x60n00D01
E	Digital Input D	UDINT	RO	0x60n00E01
F	Digital Input E	UDINT	RO	0x60n00F01
10	Digital Input F	UDINT	RO	0x60n01001

5.5 P303-3200

The RxPDO mapping object is 0x1600+n = 0x160n (n stands for the slot number). For 0x70n0:01~20, the data type is BOOL, and each subindex corresponds to a digital output channel.

Index	0x1600+n			
Subindex	Name	Data type	RW	Default value
0	Number of entries	USINT	RO	32
1	Digital Output 0	UDINT	RO	0x70n00101
2	Digital Output 1	UDINT	RO	0x70n00201
3	Digital Output 2	UDINT	RO	0x70n00301
4	Digital Output 3	UDINT	RO	0x70n00401
5	Digital Output 4	UDINT	RO	0x70n00501
6	Digital Output 5	UDINT	RO	0x70n00601
7	Digital Output 6	UDINT	RO	0x70n00701
8	Digital Output 7	UDINT	RO	0x70n00801
9	Digital Output 8	UDINT	RO	0x70n00901
A	Digital Output 9	UDINT	RO	0x70n00A01
B	Digital Output A	UDINT	RO	0x70n00B01
C	Digital Output B	UDINT	RO	0x70n00C01
D	Digital Output C	UDINT	RO	0x70n00D01
E	Digital Output D	UDINT	RO	0x70n00E01
F	Digital Output E	UDINT	RO	0x70n00F01
10	Digital Output F	UDINT	RO	0x70n01001
11	Digital Output 10	UDINT	RO	0x70n01101
12	Digital Output 11	UDINT	RO	0x70n01201
13	Digital Output 12	UDINT	RO	0x70n01301
14	Digital Output 13	UDINT	RO	0x70n01401
15	Digital Output 14	UDINT	RO	0x70n01501
16	Digital Output 15	UDINT	RO	0x70n01601
17	Digital Output 16	UDINT	RO	0x70n01701
18	Digital Output 17	UDINT	RO	0x70n01801
19	Digital Output 18	UDINT	RO	0x70n01901
1A	Digital Output 19	UDINT	RO	0x70n01A01
1B	Digital Output 1A	UDINT	RO	0x70n01B01
1C	Digital Output 1B	UDINT	RO	0x70n01C01
1D	Digital Output 1C	UDINT	RO	0x70n01D01
1E	Digital Output 1D	UDINT	RO	0x70n01E01
1F	Digital Output 1E	UDINT	RO	0x70n01F01
20	Digital Output 1F	UDINT	RO	0x70n02001

5.6 P305-0032N/P306-0032P

The TxPDO mapping object is 0x1A00+n = 0x1A0n (n stands for the slot number). The data type of 0x60n0:01~20 is BOOL, and each subindex corresponds to a digital input channel.

Index	0x1A00+n			
Subindex	Name	Data type	RW	Default value
0	Number of entries	USINT	RO	32

Index	0x1A00+n			
Subindex	Name	Data type	RW	Default value
1	Digital Input 0	UDINT	RO	0x60n00101
2	Digital Input 1	UDINT	RO	0x60n00201
3	Digital Input 2	UDINT	RO	0x60n00301
4	Digital Input 3	UDINT	RO	0x60n00401
5	Digital Input 4	UDINT	RO	0x60n00501
6	Digital Input 5	UDINT	RO	0x60n00601
7	Digital Input 6	UDINT	RO	0x60n00701
8	Digital Input 7	UDINT	RO	0x60n00801
9	Digital Input 8	UDINT	RO	0x60n00901
A	Digital Input 9	UDINT	RO	0x60n00A01
B	Digital Input A	UDINT	RO	0x60n00B01
C	Digital Input B	UDINT	RO	0x60n00C01
D	Digital Input C	UDINT	RO	0x60n00D01
E	Digital Input D	UDINT	RO	0x60n00E01
F	Digital Input E	UDINT	RO	0x60n00F01
10	Digital Input F	UDINT	RO	0x60n01001
11	Digital Input 10	UDINT	RO	0x60n01101
12	Digital Input 11	UDINT	RO	0x60n01201
13	Digital Input 12	UDINT	RO	0x60n01301
14	Digital Input 13	UDINT	RO	0x60n01401
15	Digital Input 14	UDINT	RO	0x60n01501
16	Digital Input 15	UDINT	RO	0x60n01601
17	Digital Input 16	UDINT	RO	0x60n01701
18	Digital Input 17	UDINT	RO	0x60n01801
19	Digital Input 18	UDINT	RO	0x60n01901
1A	Digital Input 19	UDINT	RO	0x60n01A01
1B	Digital Input 1A	UDINT	RO	0x60n01B01
1C	Digital Input 1B	UDINT	RO	0x60n01C01
1D	Digital Input 1C	UDINT	RO	0x60n01D01
1E	Digital Input 1D	UDINT	RO	0x60n01E01
1F	Digital Input 1E	UDINT	RO	0x60n01F01
20	Digital Input 1F	UDINT	RO	0x60n02001

5.7 P307-2408N/P308-2408P

The RxPDO mapping object is defined as 0x1600+n = 0x160n (where n stands for the slot number). For 0x70n0:01~08, the data type is BOOL, and each sub-index corresponds to a digital output channel.

Index	0x1600+n			
Subindex	Name	Data type	RW	Default value
0	Number of entries	USINT	RO	8
1	Digital Output 0	UDINT	RO	0x70n00101

Index	0x1600+n			
Subindex	Name	Data type	RW	Default value
2	Digital Output 1	UDINT	RO	0x70n00201
3	Digital Output 2	UDINT	RO	0x70n00301
4	Digital Output 3	UDINT	RO	0x70n00401
5	Digital Output 4	UDINT	RO	0x70n00501
6	Digital Output 5	UDINT	RO	0x70n00601
7	Digital Output 6	UDINT	RO	0x70n00701
8	Digital Output 7	UDINT	RO	0x70n00801

The TxPDO mapping object is 0x1A00+n = 0x1A0n (n stands for the slot number). For 0x60n0:01~18, the data type is BOOL, and each subindex corresponds to a digital input channel.

Index	0x1A00+n			
Subindex	Name	Data type	RW	Default value
0	Number of entries	USINT	RO	24
1	Digital Input 0	UDINT	RO	0x60n00101
2	Digital Input 1	UDINT	RO	0x60n00201
3	Digital Input 2	UDINT	RO	0x60n00301
4	Digital Input 3	UDINT	RO	0x60n00401
5	Digital Input 4	UDINT	RO	0x60n00501
6	Digital Input 5	UDINT	RO	0x60n00601
7	Digital Input 6	UDINT	RO	0x60n00701
8	Digital Input 7	UDINT	RO	0x60n00801
9	Digital Input 8	UDINT	RO	0x60n00901
A	Digital Input 9	UDINT	RO	0x60n00A01
B	Digital Input A	UDINT	RO	0x60n00B01
C	Digital Input B	UDINT	RO	0x60n00C01
D	Digital Input C	UDINT	RO	0x60n00D01
E	Digital Input D	UDINT	RO	0x60n00E01
F	Digital Input E	UDINT	RO	0x60n00F01
10	Digital Input F	UDINT	RO	0x60n01001
11	Digital Input 10	UDINT	RO	0x60n01101
12	Digital Input 11	UDINT	RO	0x60n01201
13	Digital Input 12	UDINT	RO	0x60n01301
14	Digital Input 13	UDINT	RO	0x60n01401
15	Digital Input 14	UDINT	RO	0x60n01501
16	Digital Input 15	UDINT	RO	0x60n01601
17	Digital Input 16	UDINT	RO	0x60n01701
18	Digital Input 17	UDINT	RO	0x60n01801

5.8 P309-0008R

The RxPDO mapping object is 0x1600+n = 0x160n (n stands for the slot number). The data type of

0x70n0:01~08 is BOOL, and each sub-index corresponds to a digital output channel.

Index	0x1600+n			
Subindex	Name	Data type	RW	Default value
0	Number of entries	USINT	RO	8
1	Digital Output 0	UDINT	RO	0x70n00101
2	Digital Output 1	UDINT	RO	0x70n00201
3	Digital Output 2	UDINT	RO	0x70n00301
4	Digital Output 3	UDINT	RO	0x70n00401
5	Digital Output 4	UDINT	RO	0x70n00501
6	Digital Output 5	UDINT	RO	0x70n00601
7	Digital Output 6	UDINT	RO	0x70n00701
8	Digital Output 7	UDINT	RO	0x70n00801

5.9 P311-AI04S

The TxPDO mapping object is 0x1A00+n = 0x1A0n (n stands for the slot number). The data type of 0x60n0:01~04 is INT, and each subindex corresponds to an analog input channel.

Index	0x1A00+n			
Subindex	Name	Data type	RW	Default value
0	Number of entries	USINT	RO	4
1	Analog Input 0	UDINT	RO	0x60n00110
2	Analog Input 1	UDINT	RO	0x60n00210
3	Analog Input 2	UDINT	RO	0x60n00310
4	Analog Input 3	UDINT	RO	0x60n00410

5.10 P312-AO04S

The RxPDO mapping object is 0x1600+n = 0x160n (where n is slot number 0). The data type of 0x7000:01~04 is INT, and each subindex corresponds to an analog output channel.

Index	0x1600+n			
Subindex	Name	Data type	RW	Default value
0	Number of entries	USINT	RO	4
1	Digital Output 0	UDINT	RO	0x70n00110
2	Digital Output 1	UDINT	RO	0x70n00210
3	Digital Output 2	UDINT	RO	0x70n00310
4	Digital Output 3	UDINT	RO	0x70n00410

5.11 P315-RTD04

The TxPDO mapping object is 0x1A00+n = 0x1A0n (n stands for the slot number). For 0x60n0:01~04, the data type is INT, and each sub-index corresponds to the sampled temperature value of the RTD channel. For 0x60n1:01~04, the data type is USINT, and each sub-index corresponds to the status of the RTD channel.

Index	0x1A00+n			
Subindex	Name	Data type	RW	Default value
0	Number of entries	USINT	RO	8
1	RTD0 Temperature	UDINT	RO	0x60n00110
2	RTD1 Temperature	UDINT	RO	0x60n00210
3	RTD2 Temperature	UDINT	RO	0x60n00310
4	RTD3 Temperature	UDINT	RO	0x60n00410
5	RTD0 Status	UDINT	RO	0x60n10108
6	RTD1 Status	UDINT	RO	0x60n10208
7	RTD2 Status	UDINT	RO	0x60n10308
8	RTD3 Status	UDINT	RO	0x60n10408

5.12 P316-TC04

The TxPDO mapping object is 0x1A00+n = 0x1A0n (n stands for the slot number). The data type of 0x60n0:01~04 is INT, and each sub-index corresponds to the sampled temperature value of the TC channel and the cold junction compensation temperature value. The data type of 0x60n1:01~04 is USINT, and each sub-index corresponds to the operating status of the TC channel and the cold junction compensation RTD.

Index	0x1A00+n			
Subindex	Name	Data type	RW	Default value
0	Number of entries	USINT	RO	10
1	TC0 Temperature	UDINT	RO	0x60n00110
2	TC1 Temperature	UDINT	RO	0x60n00210
3	TC2 Temperature	UDINT	RO	0x60n00310
4	TC3 Temperature	UDINT	RO	0x60n00410
5	CJC Temperature	UDINT	RO	0x60n00510
6	TC0 Status	UDINT	RO	0x60n10108
7	TC1 Status	UDINT	RO	0x60n10208
8	TC2 Status	UDINT	RO	0x60n10308
9	TC3 Status	UDINT	RO	0x60n10408
A	RTD0 Status	UDINT	RO	0x60n10508

6 Product Networking Configuration

6.1 Expand COP Series Modules

The ECP series products support expanding up to four COP series products. They enable information interaction between COP devices and the EtherCAT master via the EtherCAT network. The baud rate, ID and terminating resistor of COP series products need to be correctly set through the DIP switch.

6.1.1 Baud Rate Setting

The communication rate of the CAN interface of the ECP series products operates at 1 Mbps. Therefore, the baud rate of all COP devices connected to the CAN network of the ECP series modules must be set to 1 Mbps, which means both BIT5 and BIT6 of the DIP switch shall be set to the OFF state.

BIT6	BIT5	Baud rate
OFF	OFF	1Mbps
OFF	ON	500kbps
ON	OFF	250kbps
ON	ON	125kbps

6.1.2 ID Setting

Bits 1 to 3 of the DIP switch on COP series products are used for device ID configuration. The device ID is equal to the binary value of Bit 3 to Bit 1 plus 1 (for example, when Bit 1 to Bit 3 are all OFF, the ID is 1; when Bit 0 to Bit 3 are all ON, the ID is 16), and the configurable ID range is 1 to 16. For COP series devices connected to the same ECP series product, their configured IDs must not be duplicated.

BIT4	BIT3	BIT2	BIT1	ID
OFF	OFF	OFF	OFF	1
OFF	OFF	OFF	ON	2
OFF	OFF	ON	OFF	3
OFF	OFF	ON	ON	4
OFF	ON	OFF	OFF	5
OFF	ON	OFF	ON	6
OFF	ON	ON	OFF	7
OFF	ON	ON	ON	8
ON	OFF	OFF	OFF	9
ON	OFF	OFF	ON	10
ON	OFF	ON	OFF	11

BIT4	BIT3	BIT2	BIT1	ID
ON	OFF	ON	ON	12
ON	ON	OFF	OFF	13
ON	ON	OFF	ON	14
ON	ON	ON	OFF	15
ON	ON	ON	ON	16

Due to the ID arbitration feature of the CAN network, when there are special real-time requirements for expansion modules, it is recommended to set the ID of the corresponding module to a relatively small value among the expansion modules (a smaller ID has a higher priority for data transmission).

6.1.3 Terminal Resistor Setting

The CAN interface of the ECP series products is already equipped with a terminating resistor. To better ensure reliable communication of the CAN network, it is necessary to install an additional terminating resistor at the farthest end of the CAN network for ECP series products.

The CAN interface of the COP series products also has a built-in terminating resistor, which can be enabled or disabled via DIP switch BIT7.

6.2 Alias Address Settings

Alias address configuration for ECP series couplers. Users can configure the alias address via the alias address setting window of the EtherCAT master, which will be stored in the alias address memory (EEPROM) within the ESI file. After configuration, the device needs to be power-cycled for the set value to take effect.

The configured alias address can be read via the object dictionary 0x10E0:01.

For the specific configuration procedure, please refer to the "Alias Address Configuration" section in the chapter "Application in TwinCAT3".

6.3 Firmware Upgrade

The ECP series EtherCAT products support firmware upgrade via the FoE function of EtherCAT. Connect the ECP series EtherCAT devices through the controller, switch the EtherCAT state machine of the ECP device to the "Bootstrap" network state, and then enter the FoE firmware upgrade function page. Click the "Download" button, select the firmware to be upgraded as prompted, and enter the upgrade password (the password is the product number. In TwinCAT, for example, if the model is P601, the password shall be entered as its hexadecimal value 00000259).

Note that the safety of the device's external control signals must be taken into account during firmware upgrade. It is generally recommended to perform the upgrade when the module is no longer

controlling the system.

Usually, the development environments provided by EtherCAT master station manufacturers are equipped with FoE firmware upgrade interfaces. The ECP series products can use such interfaces to complete firmware upgrade operations. For detailed procedures and methods, refer to the "Firmware Upgrade" section in the chapter "Application in TwinCAT".

The COP series modules extended via the ECP module can also have their firmware updated through the FoE function. The operation procedure is identical to the FoE update steps for ECP. The only difference is that you need to select COP upgrade firmware files starting with P3xx, and the password is the product number. For example, for the file P301_xxx.bin, the hexadecimal value corresponding to the product number 301 is 0x0000012D. After the COP firmware is transmitted to the ECP module, the ECP module will download the firmware to the COP module, and the TS indicator LED on the ECP device will flash at 5 Hz. Please wait until the flashing stops and do not power off the device during this process. Modules with completed COP firmware updates will load the new firmware upon the first power-on. During this period, the RUN indicator LED on the COP module will flash rapidly at approximately 10 Hz. Keep the device powered on until the flashing ceases. Afterwards, the COP module will operate with the updated firmware.

All same type COP modules will be updated within the firmware which is transmitted via FoE. So we need to wait for longer time if more same COP type modules on the line. Don’t connect the modules which you do not want to update its firmware while the same type COP updating.

7 Application in TwinCAT3

7.1 Environment Preparation

One computer with TwinCAT3 installed.

Several dedicated CAT5 cables for EtherCAT.

24VDC output switching power supply to supply power for ECP and COP series expansion modules.

Modules include:

P601_1616N

EtherCAT slave device description file ECP01_V103_4.XML (example) for P601_1616N.

First, copy the ESI file of ECP01, namely ECP01_V103_4.XML, to the TwinCAT installation directory: "C:\TwinCAT\3.1\Config\Io\EtherCAT".

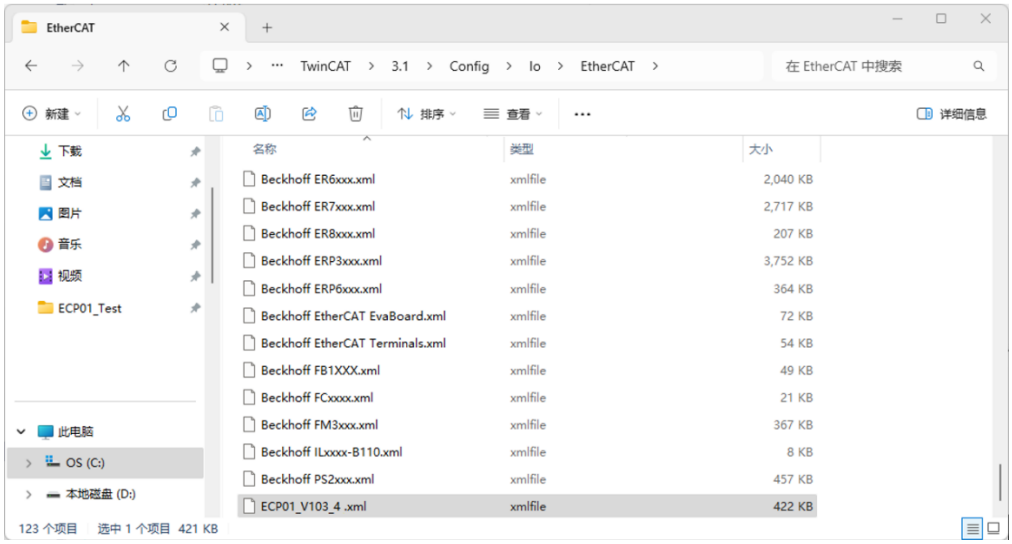

7.2 Create a Project

Launch TwinCAT3 software. Create a project via the menu: File\Project, select TwinCAT Projects to create a project named ECP01_demo (example), and click "OK" to finish project creation.

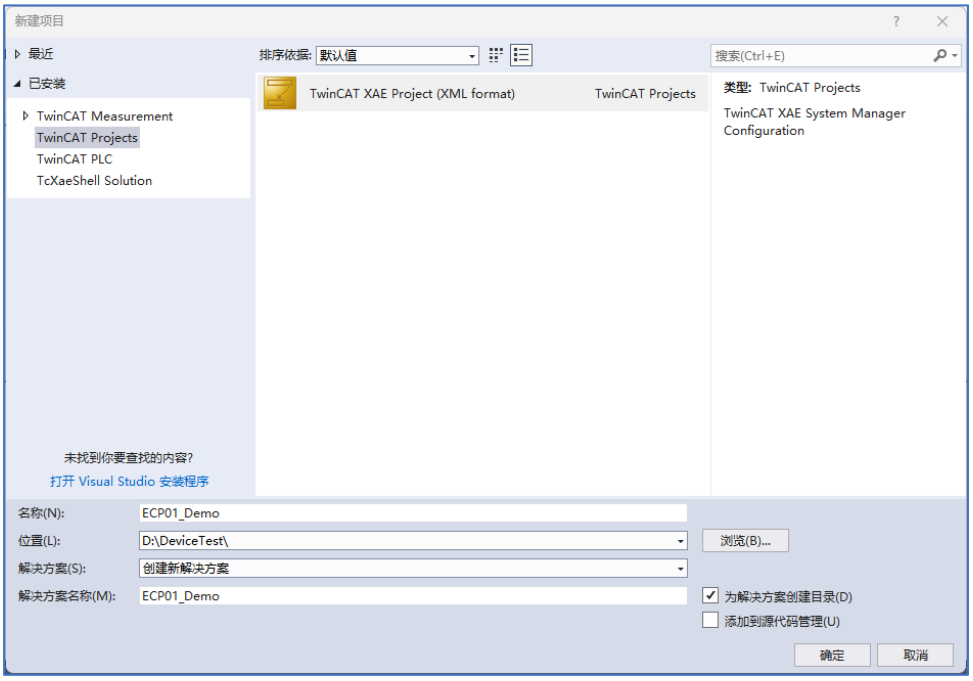

7.3 Add Device

Users can add devices via automatic scanning and manual methods.

7.3.1 Automatic Scanning

In the engineering resource management tree, select I/O -> Devices, then choose "Scan" from the right-click menu to start device scanning.

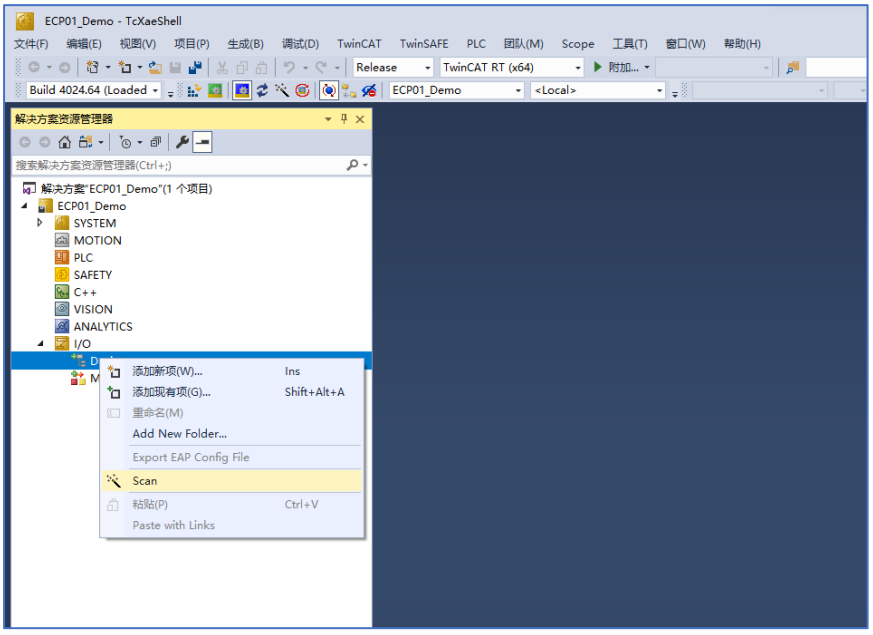

After starting the scan, a prompt menu pops up, select "Confirm".

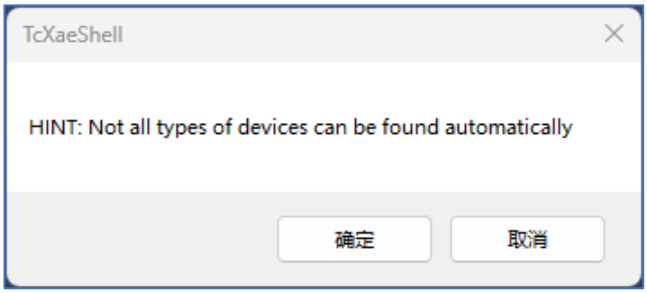

Select the network card of the connected device and click the "OK" button.

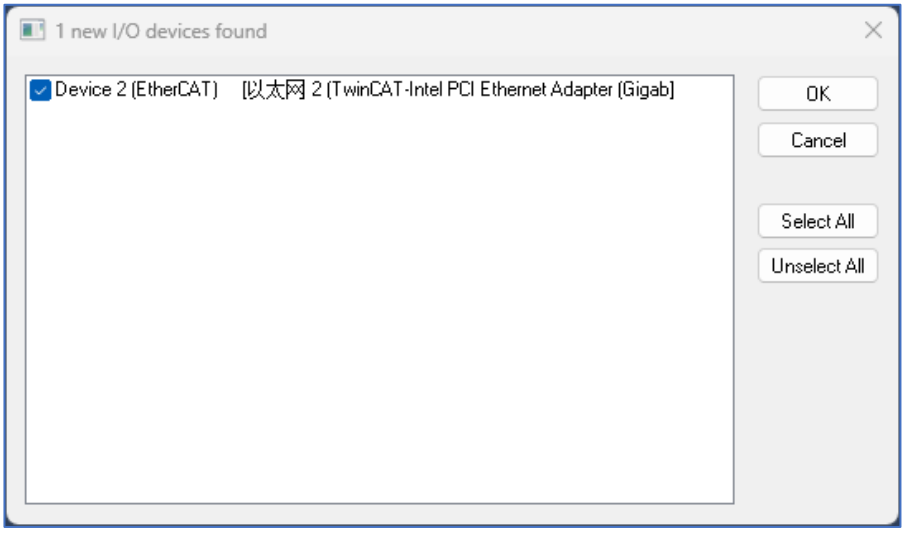

Select "OK" in both of the following steps to complete the device scan.

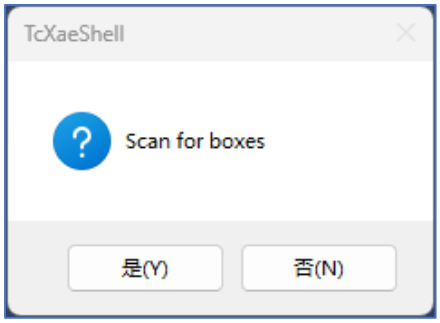

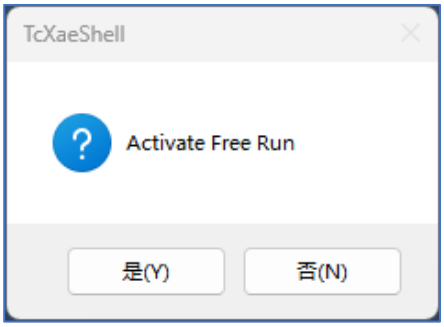

After completing the device scan, ECP01 and its connected expansion module P601 can be detected and displayed in the project tree, with the device entering the OP state (default state machine transition configuration).

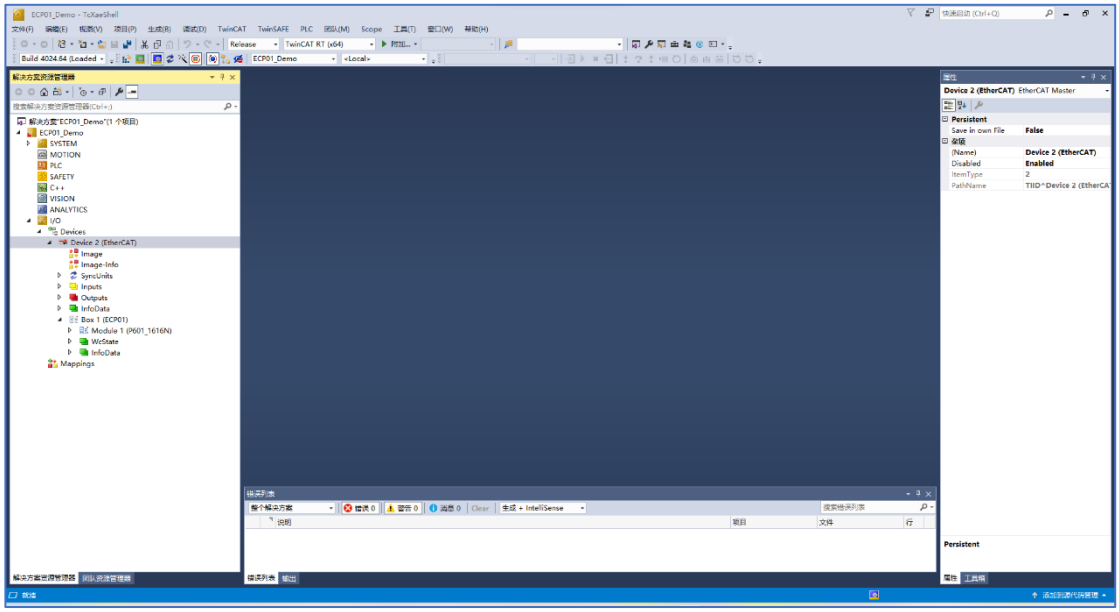

At this point, users can view the interactive data of each device through the engineering tree directory. As shown in the figure, the TxPdo data of Expansion Module 1 (P601_1616N) can be observed.。

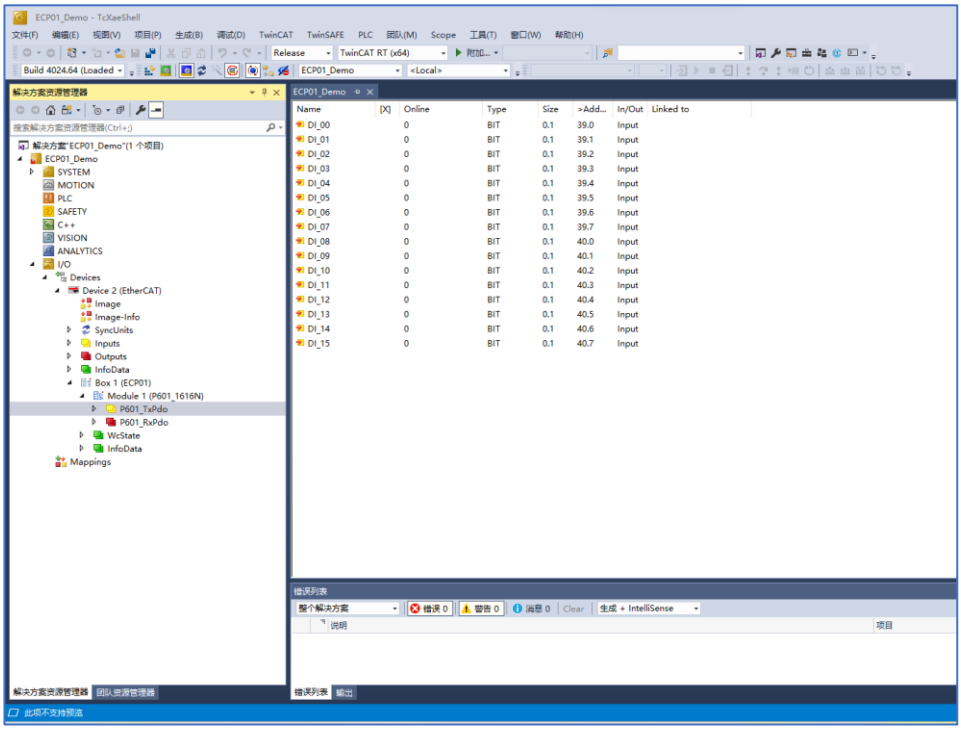

Select the output module (e.g., P601_1616N), double-click the specific output port, select the "Online" tab in the pop-up window, and then click the "Write..." button to start the write operation of the port.

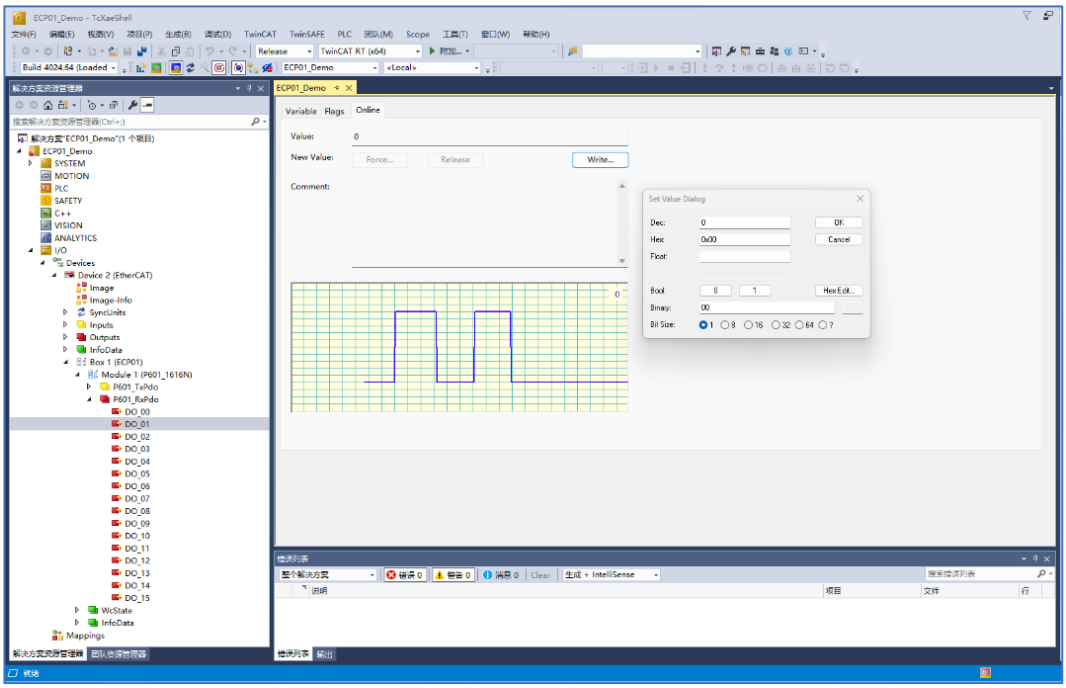

Select the "Variable" tab and click "Linked to..." to link the corresponding PDO data to the software variables.

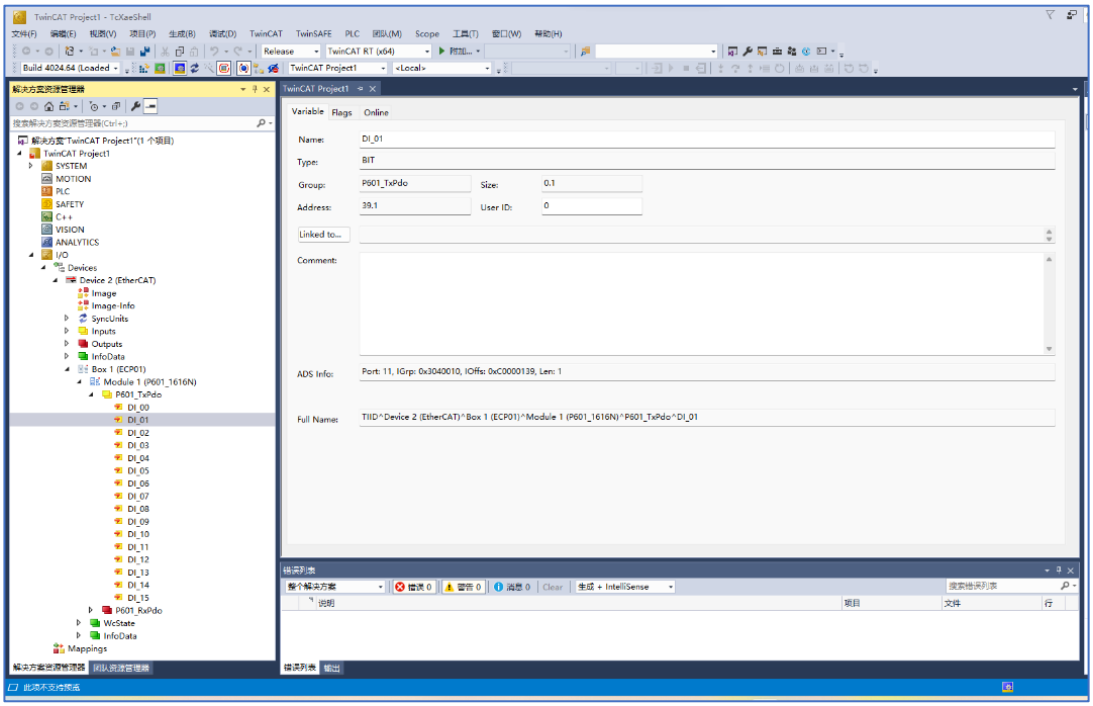

Users can also select device variables in the project tree and modify and configure variable links via the right-click menu option "Change Link...".

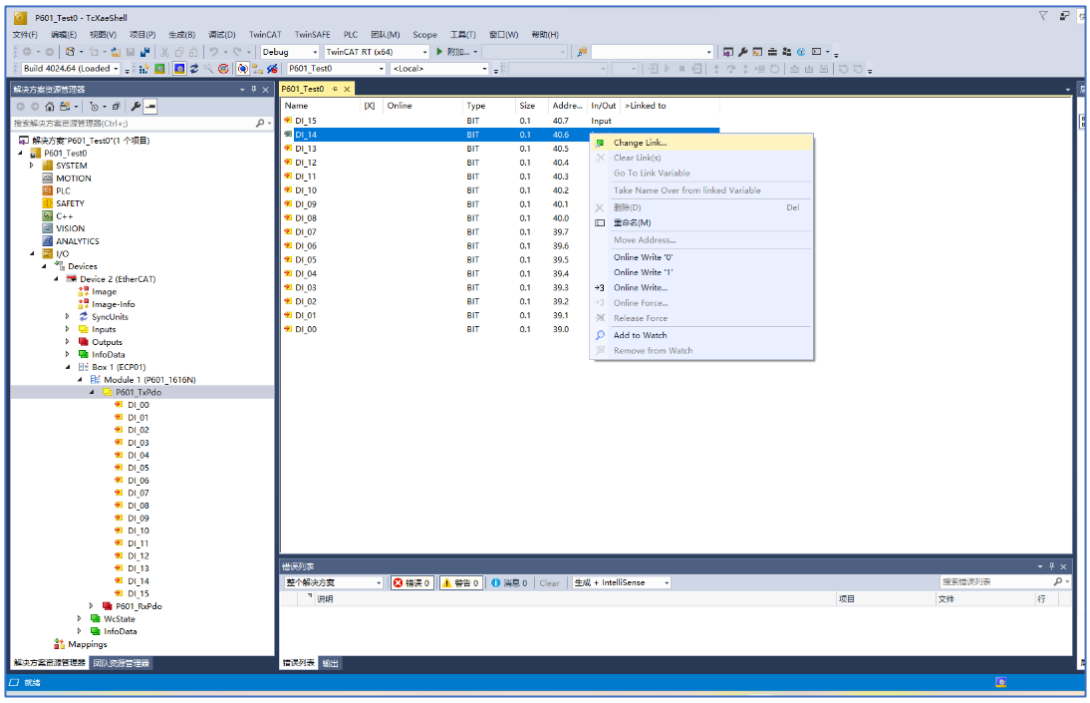

7.3.2 Manual Addition

In the project directory tree, select"I/O -> Devices", right-click and choose "Add New Item…". First, add "EtherCAT/EtherCAT Master" and set the device name to Device 1 (the default name).

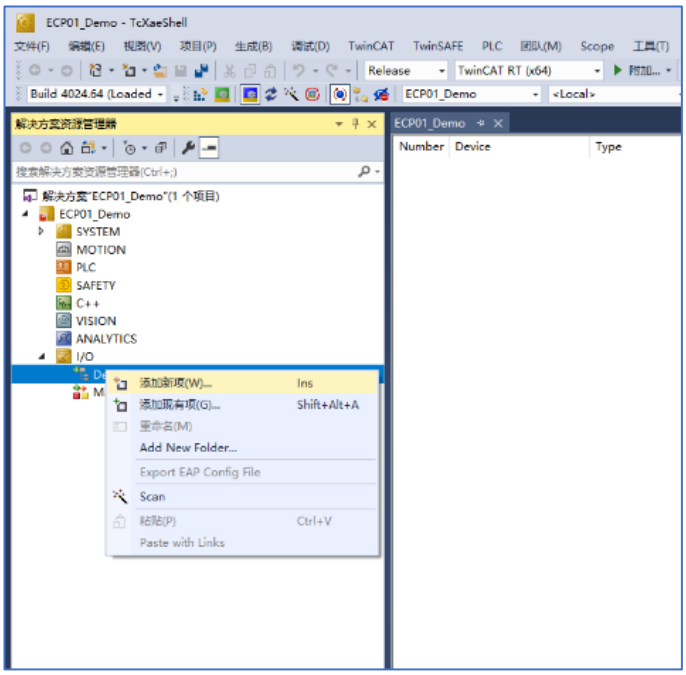

In the engineering tree, right-click the newly added Device 1, select "Add New Item…" from the menu, and add the ECP01 device.

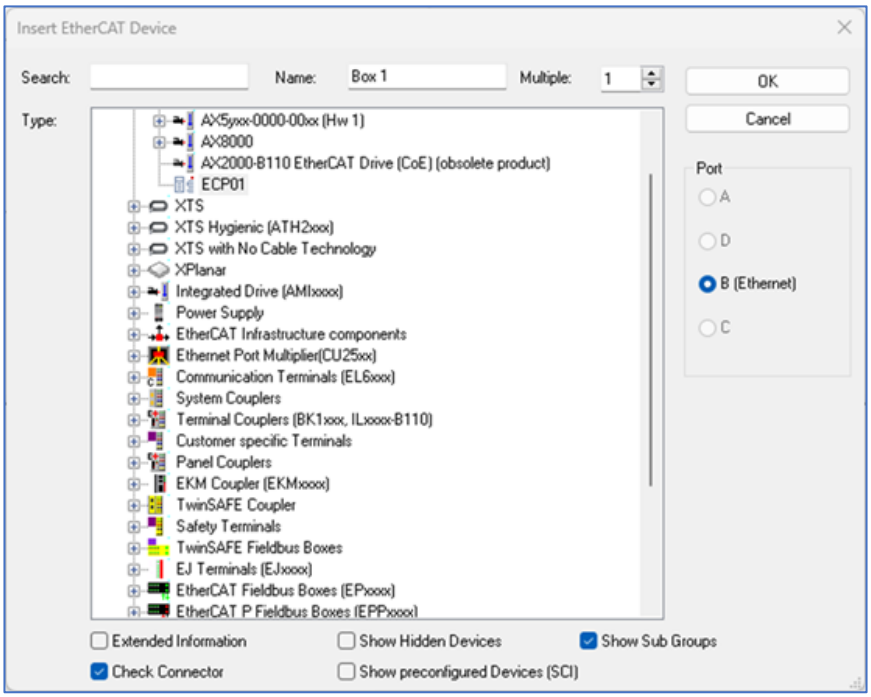

After completing the addition of ECP01, add the corresponding expansion modules to each Slot of ECP01. Users can double-click the ECP01 device, select the **Slots** tab in the pop-up window, choose expansion modules matching the actual connections from the right panel for each Slot connected to expansion modules on the left, and add them to the corresponding Slots on the left.

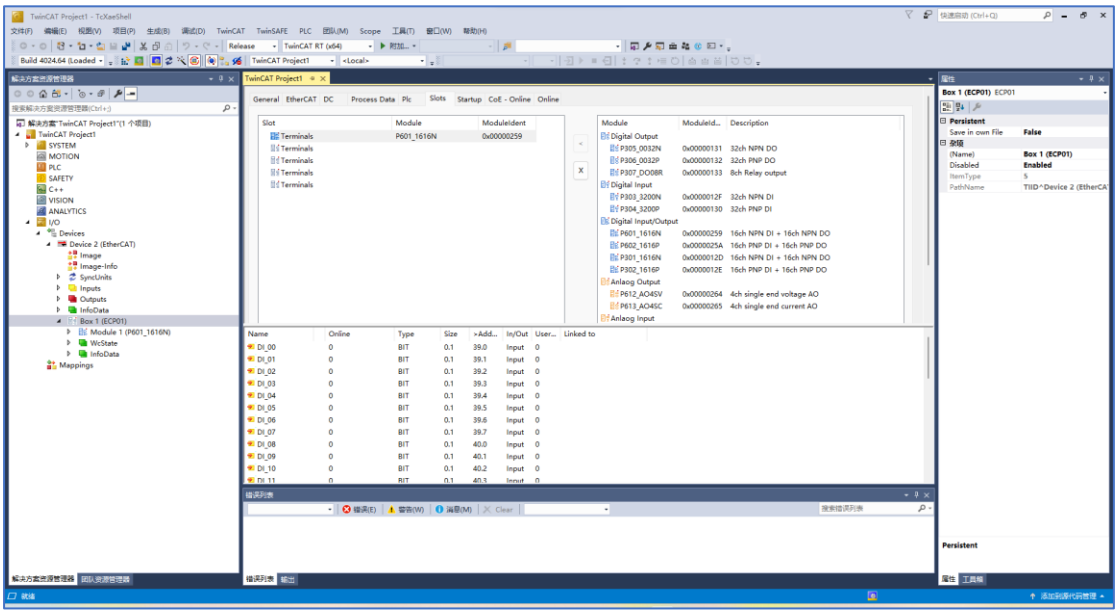

Note: When adding devices manually, ensure the configured devices are consistent with the actual devices in use. Otherwise, the EtherCAT slave devices will fail to enter the OP state.

After completing manual configuration, if you need to activate the current configuration and set the module to the running state, you can activate the configuration in the TwinCAT menu. As shown in the figure, use "Restart TwinCAT (Config Mode)".

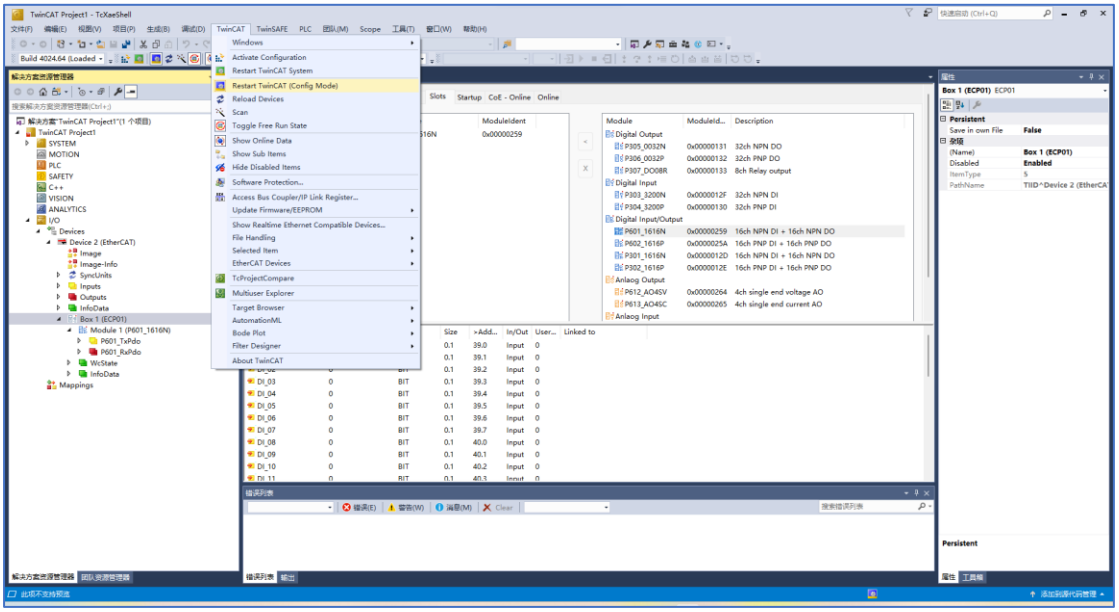

7.4 Firmware Upgrade

The firmware of ECP01 can be upgraded via the FoE function. After connecting to ECP01, select the ECP01 device, and in the Online tab, manually switch the device to Bootstrap mode (FoE operations need to be performed under the BOOT state machine).

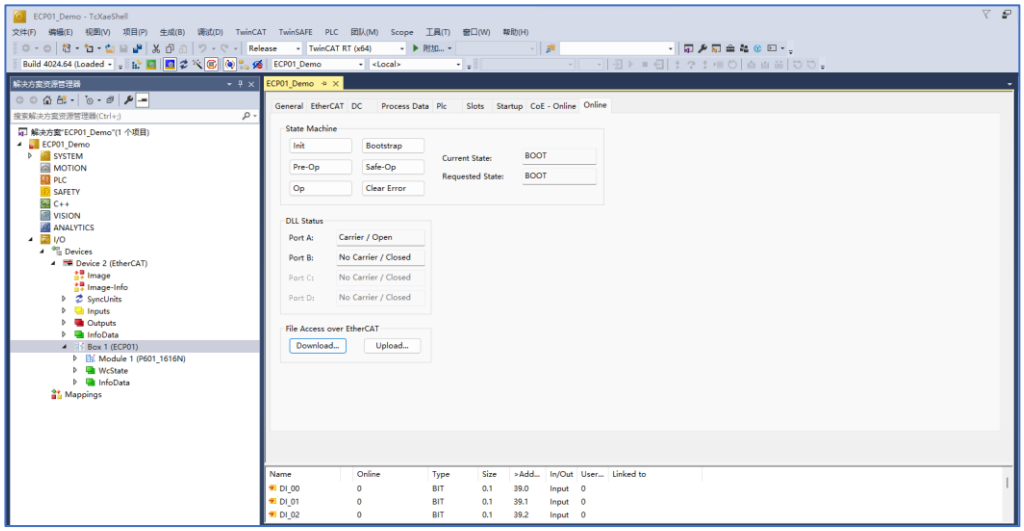

After the ECP01 device enters the BOOT state, click the "Download..." button and select the .bin format firmware for upgrade (you need to set the file type to All files (*.*).

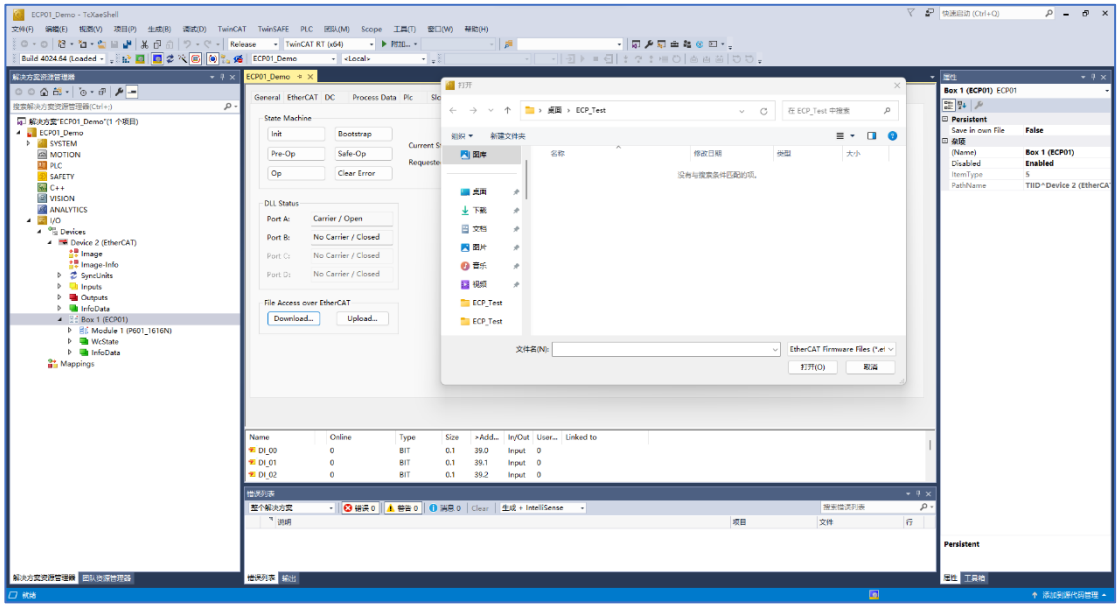

Set the file type to All Files (*.*) and select the .bin file for upgrade.。

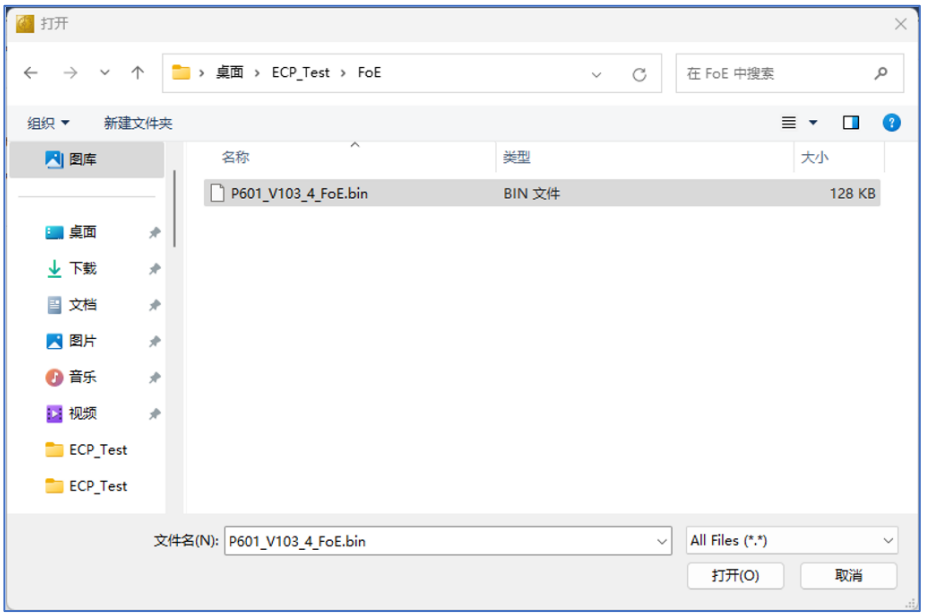

After selecting the .bin file for upgrade (the file name starts with P601), click "Open".

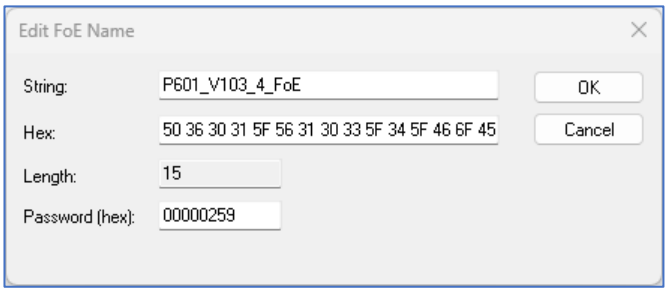

Enter the password (hexadecimal): 00000259 in the pop-up dialog box to complete the firmware upgrade. The process takes several tens of seconds; just wait for it to finish automatically.。

7.5 Alias Address Settings

Select the ECP01 device, click the "Advanced Setting..." button on its "EtherCAT" tab, and enable some advanced settings of EtherCAT.

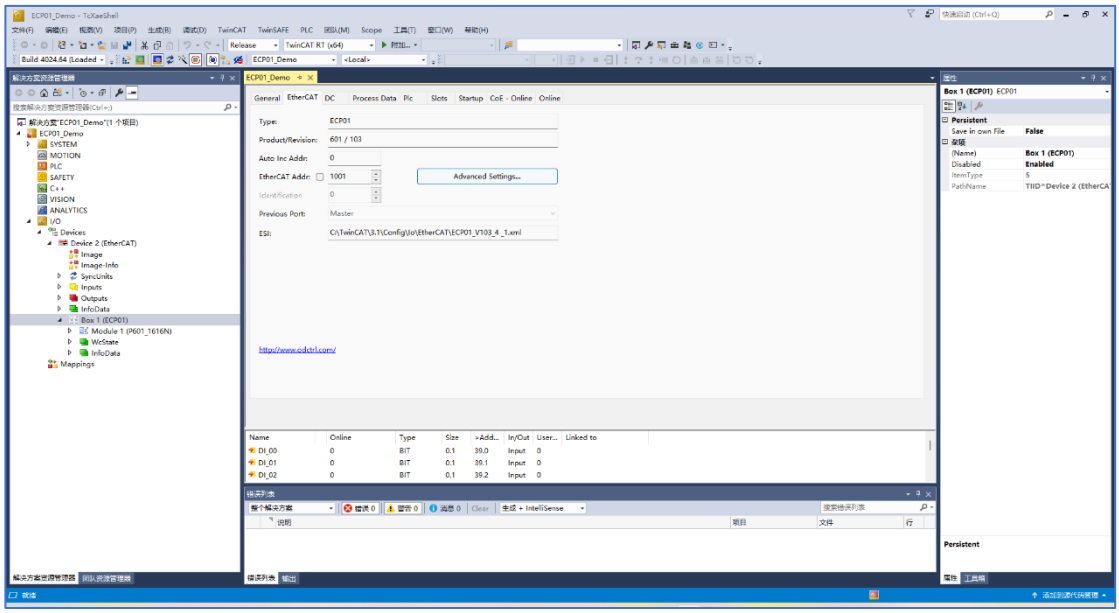

In the Advanced Settings window, select the option **ESC Access-EEPROM-Configured Station Alias** to enter the alias address setting page. Set the value to 3 as shown in the figure, then click "Write to EEPROM".

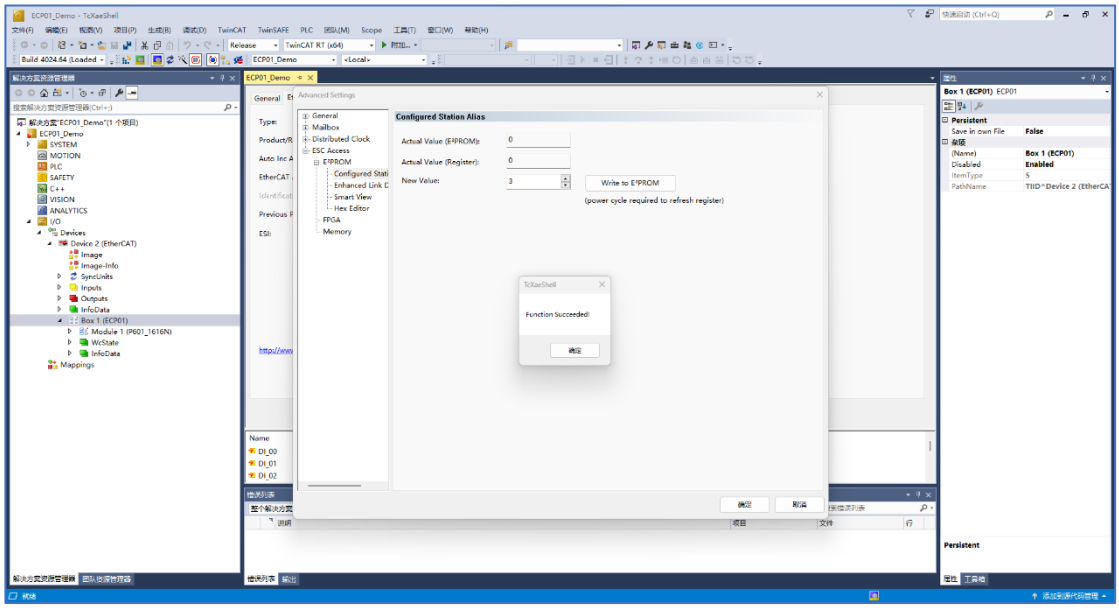

Power on again and enter the alias address setting page, where you can see that both the designed value and the set value of the alias address are 3.

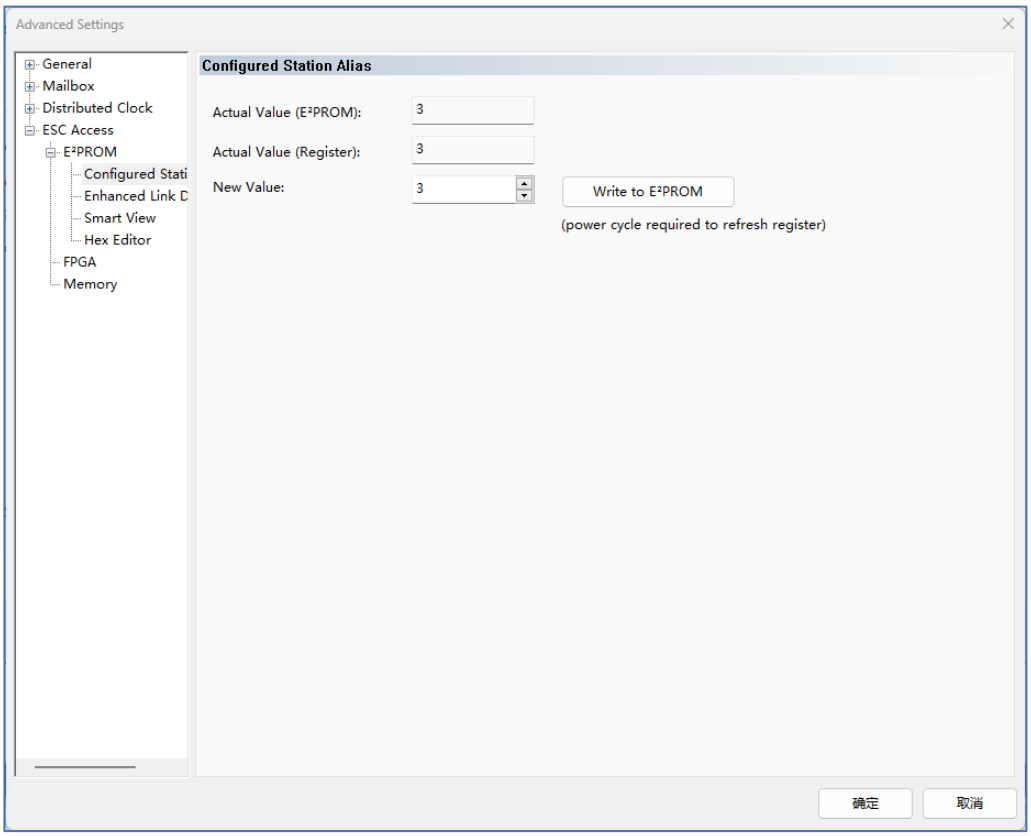
Advanced Settings
General
Mailbox
Distributed Clock
ESC Access
E²PROM
Configured Stati
Enhanced Link D
Smart View
Hex Editor
FPGA
Memory
Configured Station Alias
Actual Value (E²PROM):
3
Actual Value (Register):
3
New Value:
3
Write to E²PROM
(power cycle required to refresh register)
确定
取消

8 Application in Codesys V3.5

8.1 Environment Preparation

One computer installed with CODESYS V3.5.

Several dedicated CAT5 cables for EtherCAT.

24VDC output switching power supply to supply power for ECP and COP series expansion modules.

Modules include:

1) P601_1616N

2) P301_1616N

3) P301_1616N

EtherCAT slave device description file ECP01_V103_4.XML (example) for P601_1616N.

Taking CODESYS Control Win V3 x64 as an example, it is required to start CODESYS Control Win V3 x64 and use the PC as the PLC controller.

8.2 Equipment Installation

When using the ECP01 device for the first time, you need to install the ECP device.

Launch the Codesys software, select "Tool/Device Repository..." from the menu, click the "Install" button, choose the file ECP01_V103_4.XML (for reference), and install the ECP01 device.

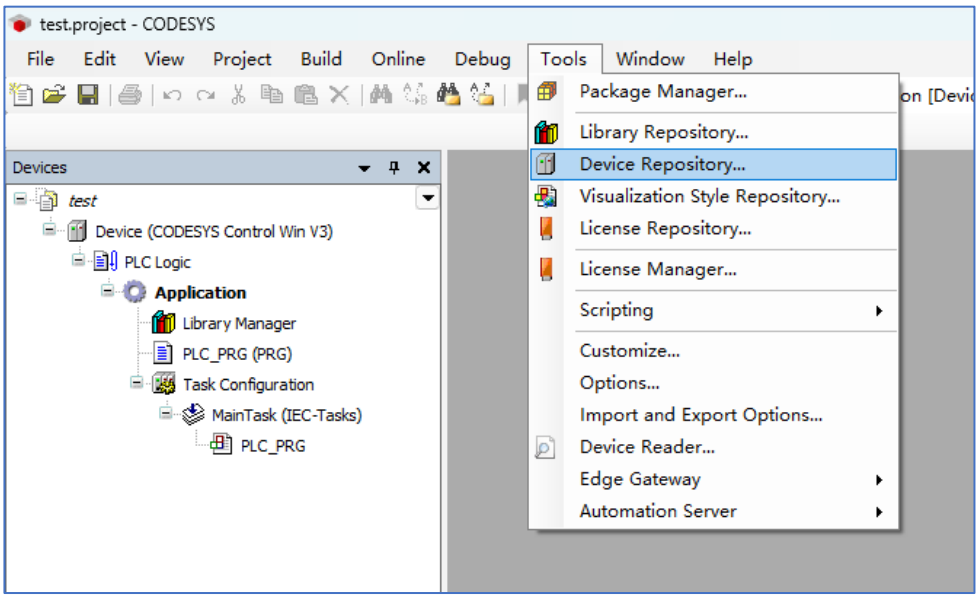

After successful installation, you can find the ECP01 device and module in the device repository window.

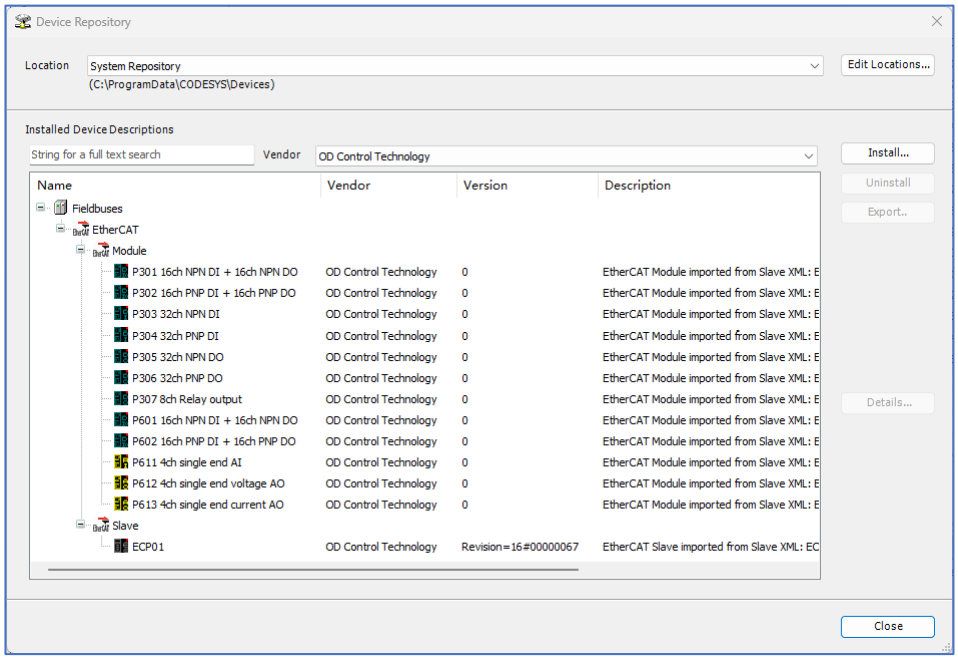

8.3 Create a New Project

Create a new project named demo via the menu "File/New Project..." in CODESYS.

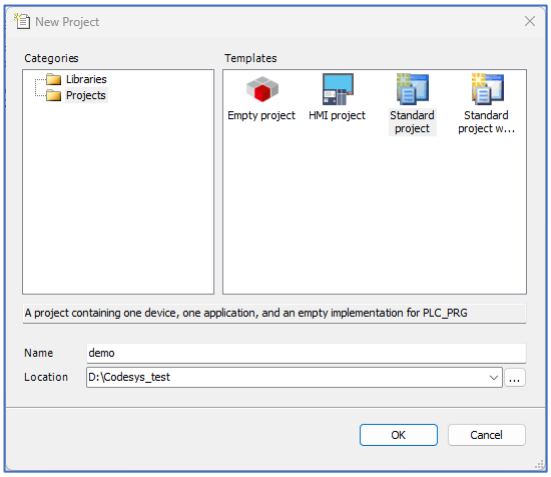

Select the device to be used (taking CODESYS Control Win V3 x64 as an example) and the programming language of the PLC_PRG file (Default setting: Structure Text(ST).

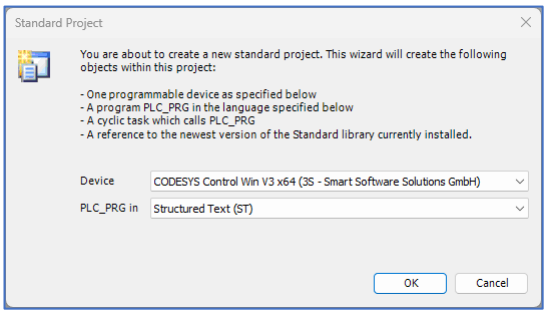

8.4 Add Device

Double-click Device(CODESYS Control Win V3 X64) in the project tree on the left to open the device network window. Click "Scan Network" at the top of the window. As shown in the figure, both Gateway and Device are displayed in green. If they are not green, please check the configuration and software installation.

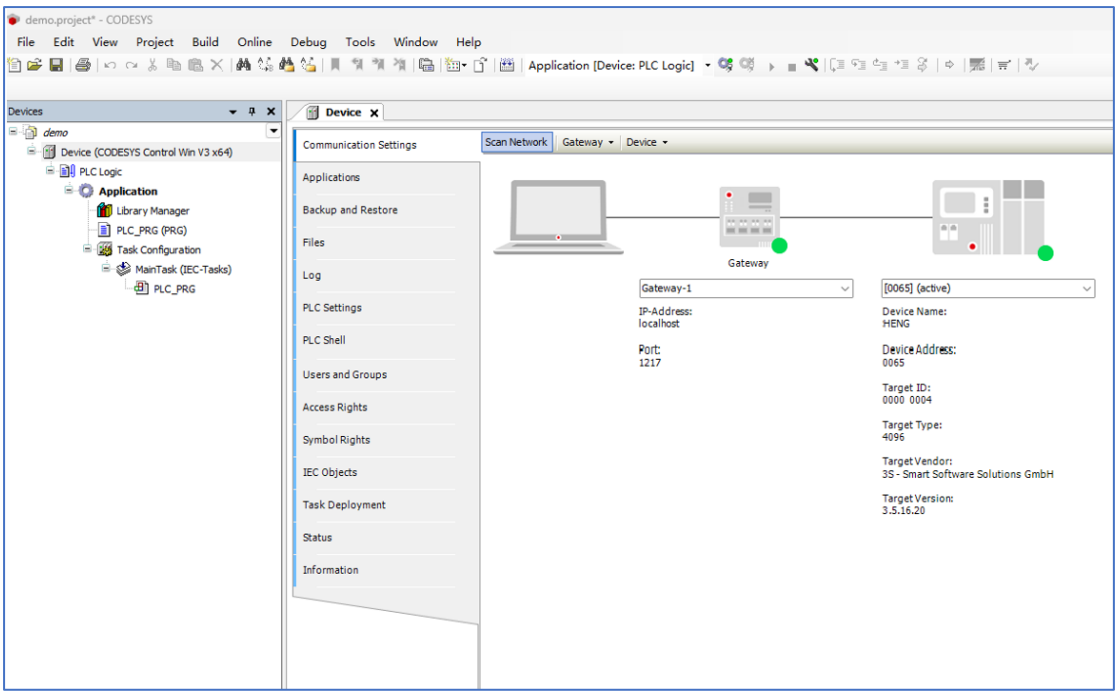

Select Device(CODESYS Control Win V3 X64) in the project tree on the left, right-click and choose "Add Device...", then select "EtherCAT Master" in the pop-up window.

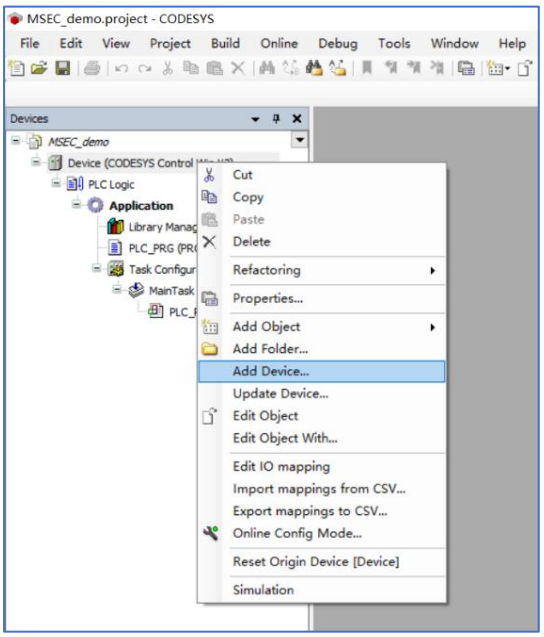

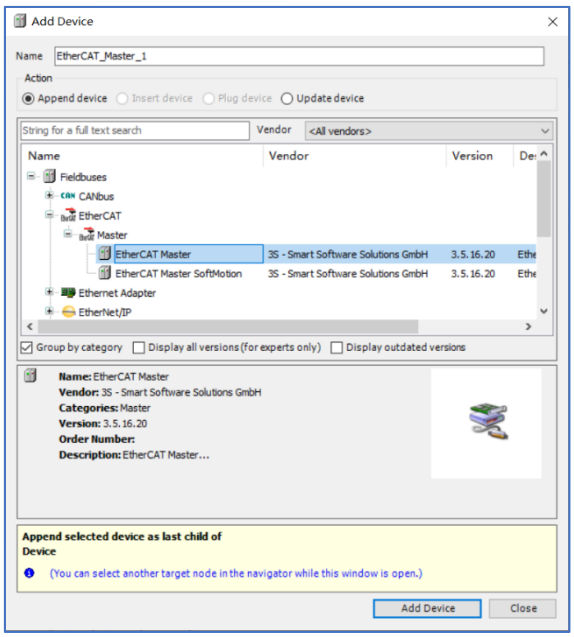

Select the EtherCAT Master and click the "Add Device" button; the branch of the EtherCAT Master will be displayed in the project tree on the left.。

Close the Add Device window, double-click the newly added EtherCAT Master in the project tree, click "Browse..." on the opened page, and select the network card.

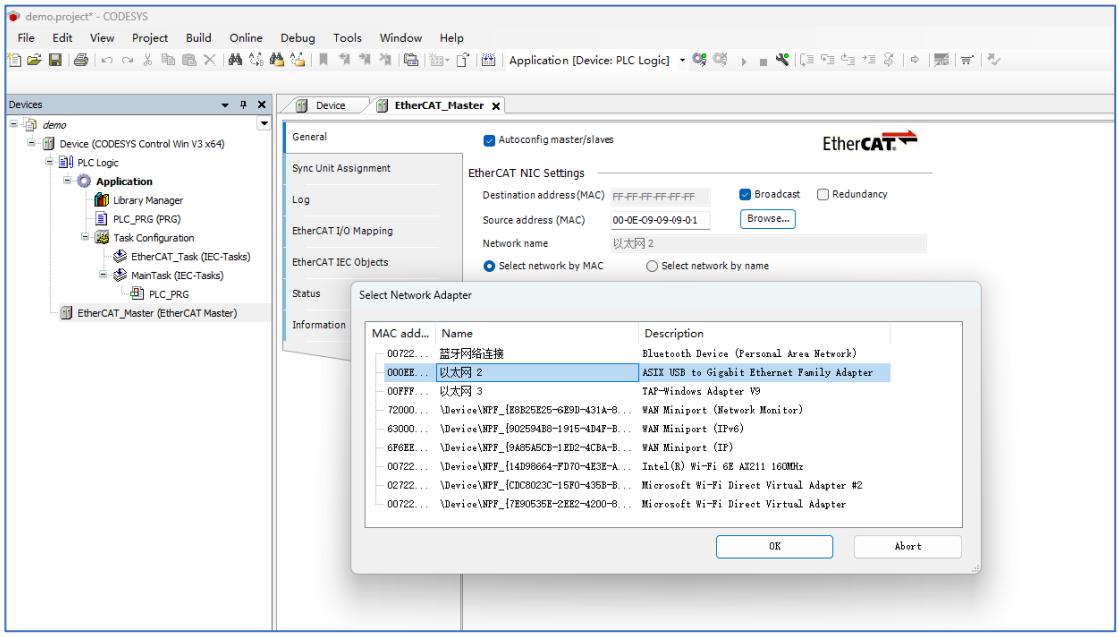

8.4.1 Auto Scanning

Click the "Login" button , Login Controller.

Select the engineering tree "EtherCAT Master", right-click and choose "Scan for Devices...", and the connected devices will be displayed in the window.

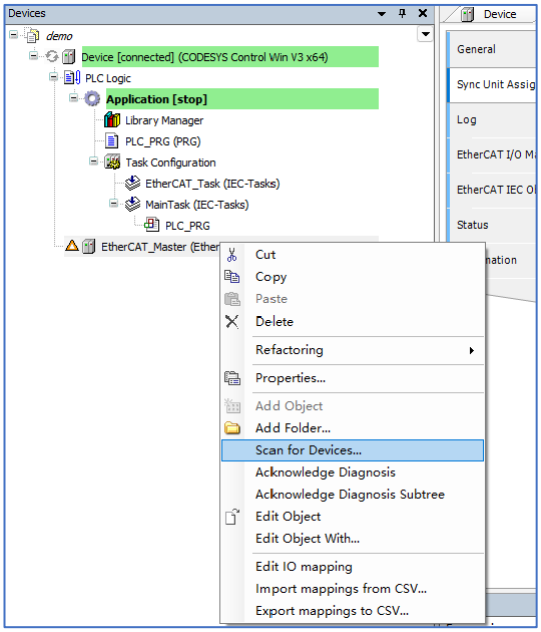

Click the Scan Device button to discover the connected ECP01 device.

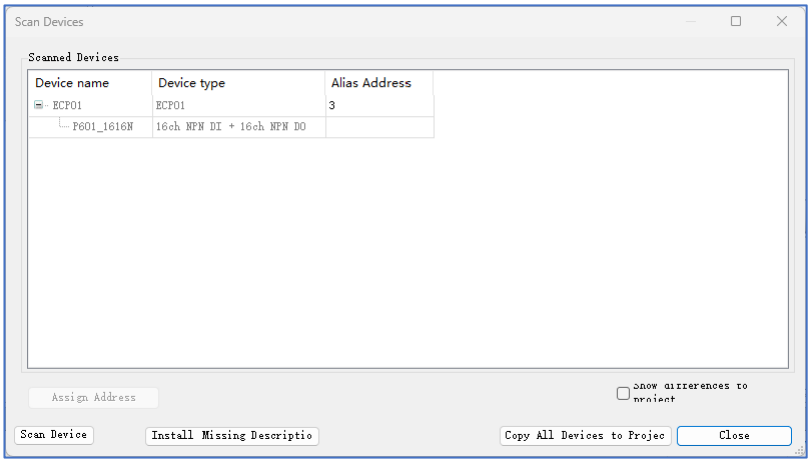

Click the "Copy All Devices to Project" button to add all devices under "EtherCAT Master" in the project tree.

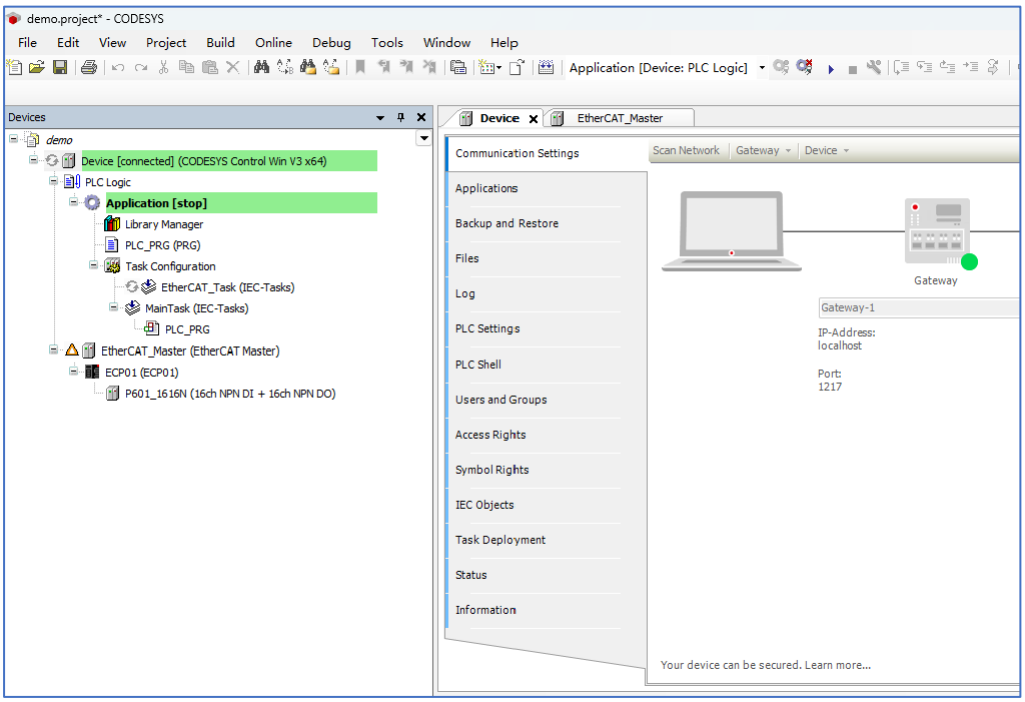

Click the logout button , After clicking the compile button, click the Login button again. Then click the run button to start the program to run. At this point, ECP01 will enter the OP state.

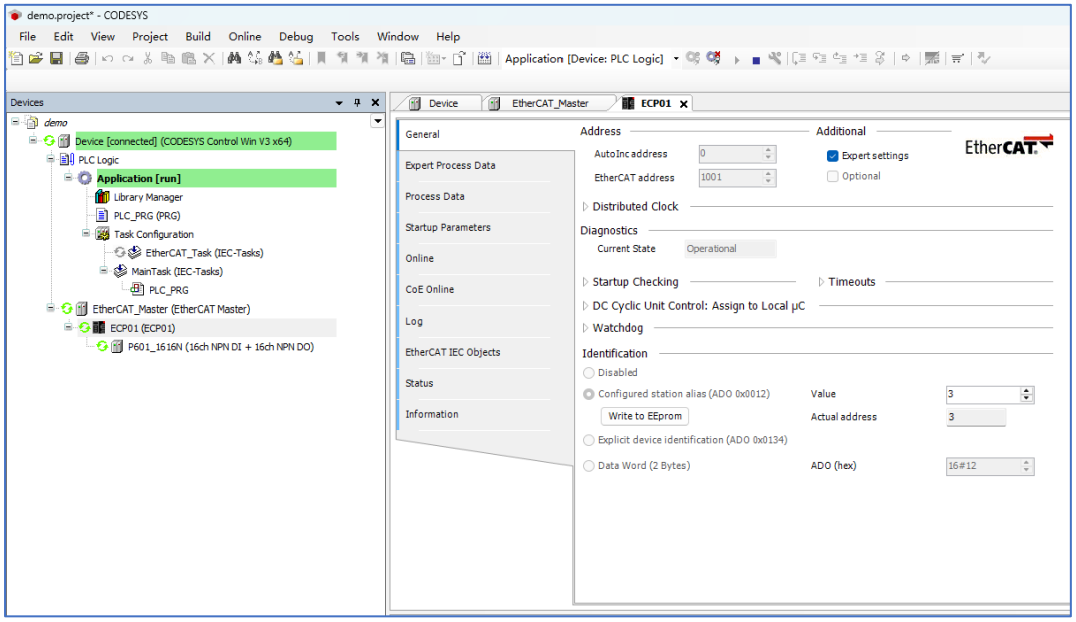

8.4.2 Manual Configuration

Manually configure network devices. It is necessary to ensure that the configuration is consistent with the actual connection type and sequence according to the actual conditions of the connected devices. In the project tree, select "EtherCAT Master" and choose "Add Device..." from the right-click menu.

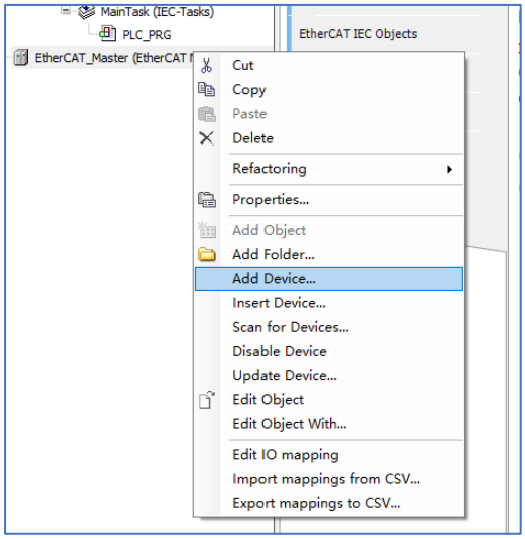

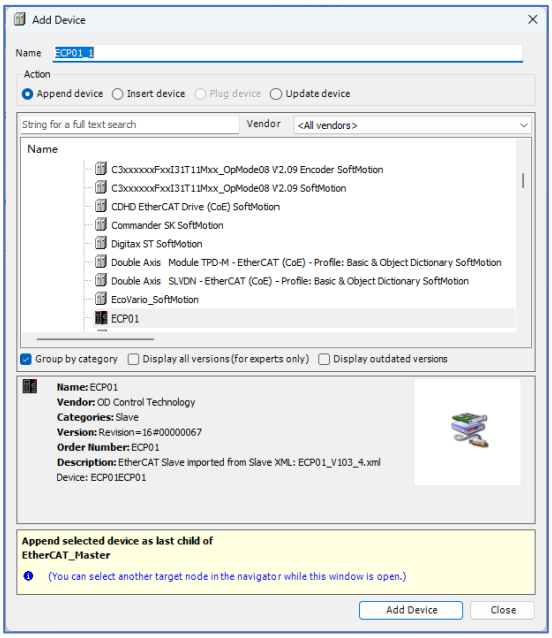

In the engineering tree, select "ECP01" and choose "Add Device..." from the right-click menu.

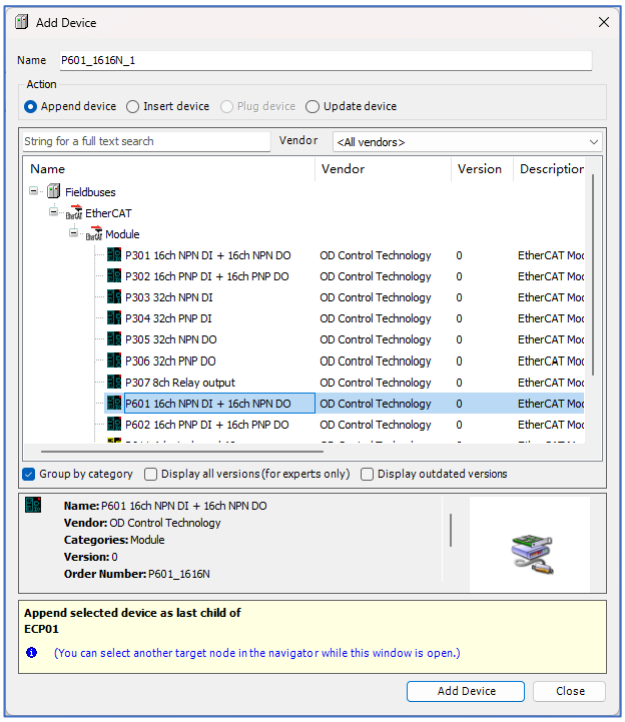

Add each expansion module in sequence according to the actual connection order of ECP01 and the corresponding module model.

8.5 Setting and Usage of Alias Address

For devices with an alias address set, you need to check **Expert settings** on the device, then select **Configured station alias(ADO 0x0012)** under Identification. You may also set the device's alias address here. After configuring the alias address, click the **Write to EEPROM** button. Any modifications to the configuration require recompiling, downloading, and logging in to run the program again.

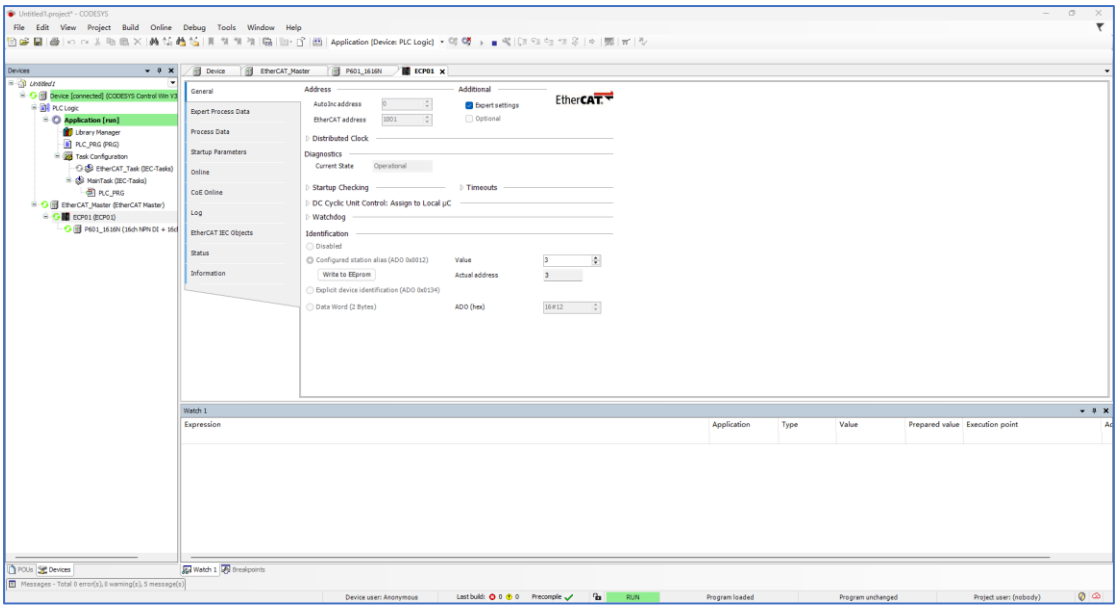

8.6 Use of Data

The device data is stored by default in the storage space as shown in the figure below. For example, DO_00 is stored in %QX0.0.

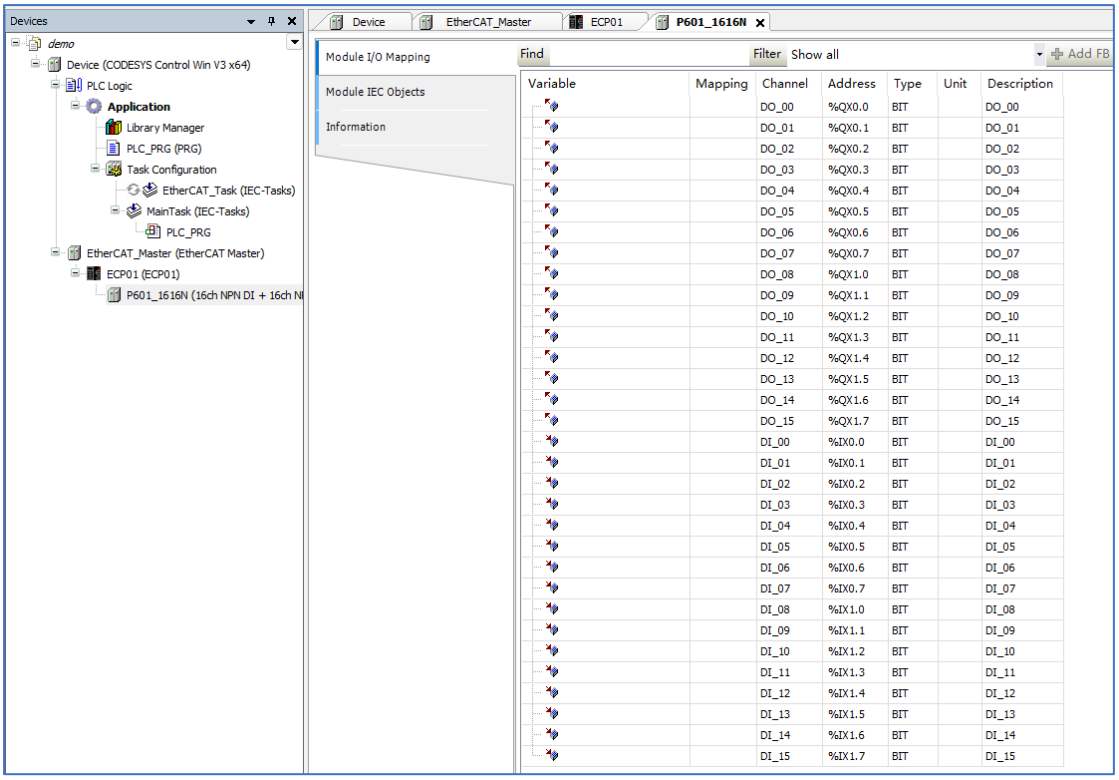

If you need to map PDO data to user variables, double-click the icon of each process data in Variable, and the interface will trigger the variable mapping operation.

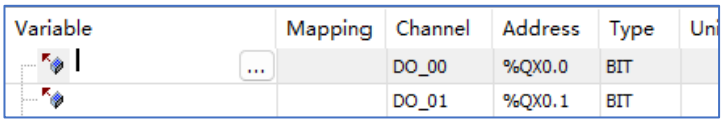

Click the button ..., to open the variable mapping settings immediately.

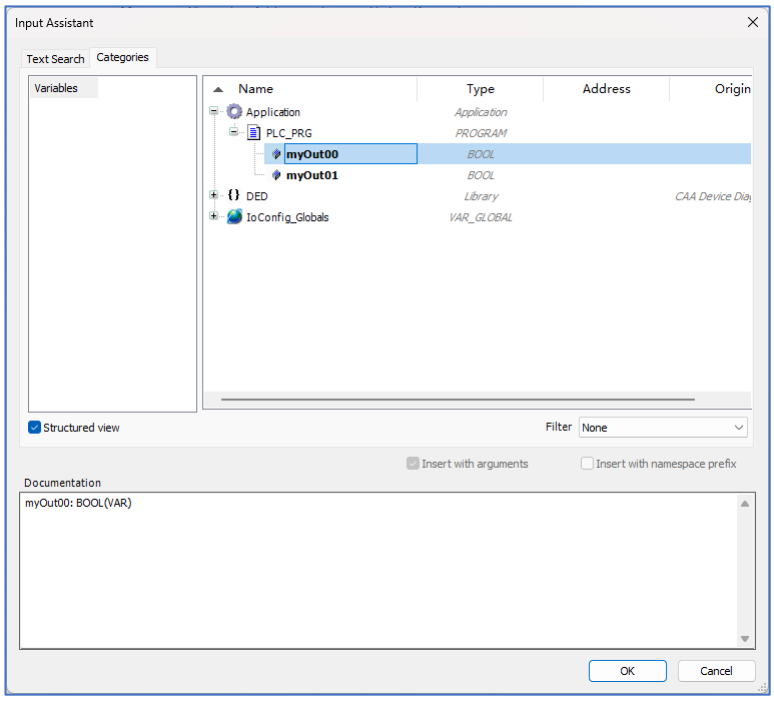

After selecting myOut00 for DO_00 and myOut01 for DO_01, the mapping of PDO is shown in the figure below.

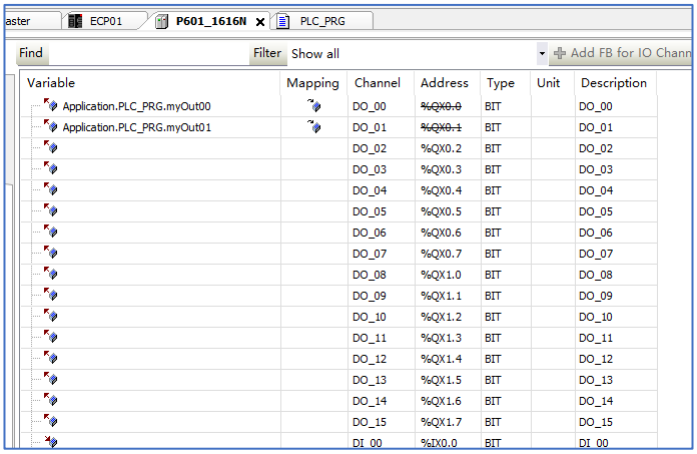

Compile the program, click the "Login" button, and run the controller. You can then observe the input and output status of the actual modules as well as the status of linked variables in the program.。

8.7 Firmware Upgrade

Log in and run the program, then double-click to enter the Online page of the ECP01 device. Switch the device state machine to the Bootstrap state.

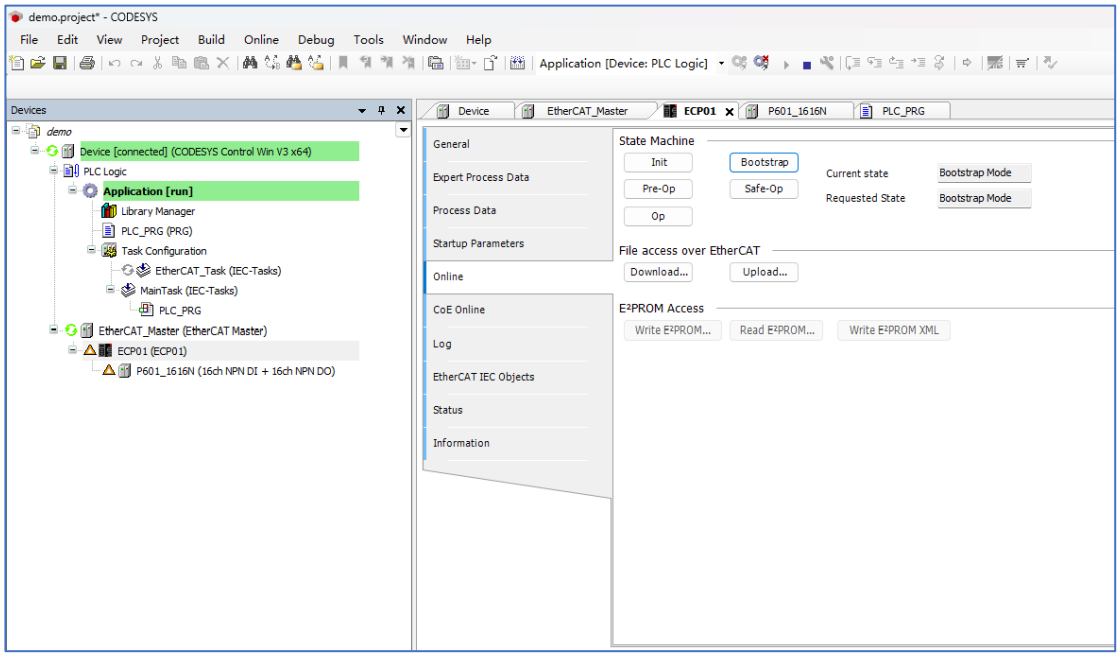

After switching ECP01 to the Bootstrap state machine, click the Download… button to pop up the file selection window for FoE upgrade, then select the correct .bin file.

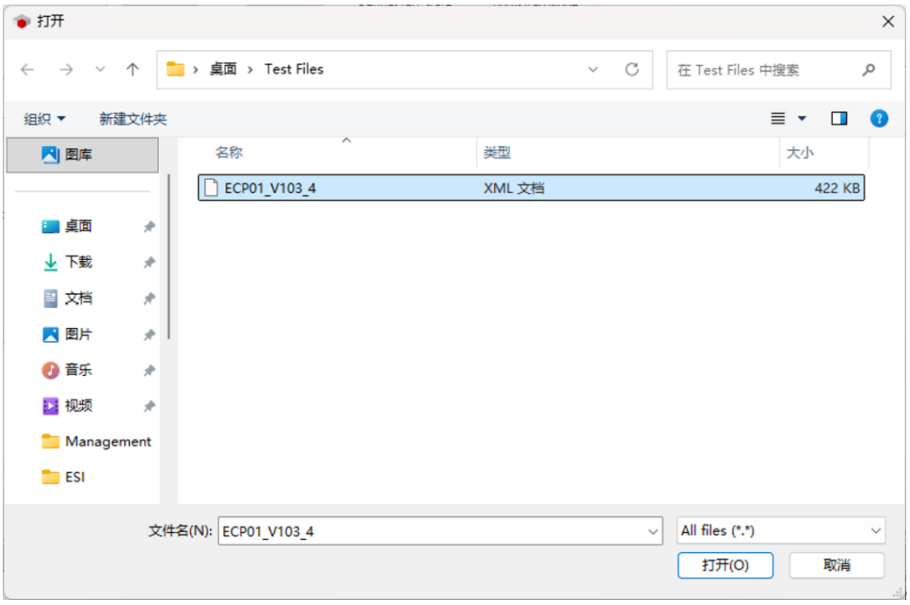

After clicking the firmware to be upgraded, tap "Open", a dialog box will pop up. Enter the password (hex): 259, click the "OK" button, the firmware upgrade will start automatically, and just wait for the progress bar to complete.

9 Using ECP Module with Inovance Compact PLC

Taking Easy521 as an example, this document explains how to establish connections to P6xx series modules via EtherCAT and build a control system.

9.1 Environment Preparation

One computer with AutoShop V4.10.0 installed.

Several dedicated CAT5 cables for EtherCAT.

24VDC output switching power supply to supply power for ECP and COP series expansion modules.

Modules include:

1) P601_1616N

2) P301_1616N

9.2 Create a New Project

Open the AutoShop software, go to the menu: File / New Project page, and create the Test project as shown in the figure.

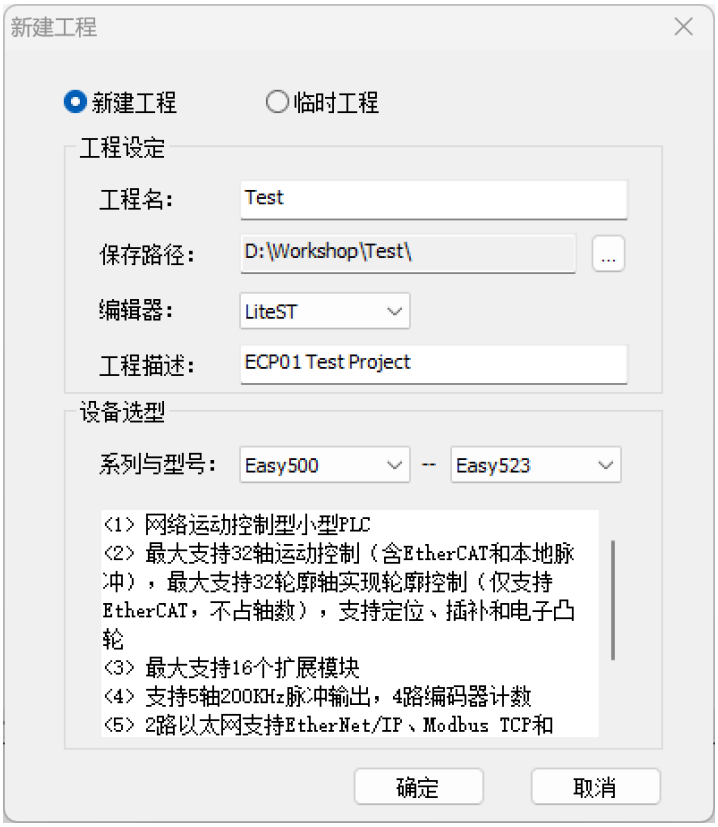

9.3 Import ESI File

When using the ECP01 device for the first time, you need to import the ESI file. In the toolbox on the right side of the project creation interface, select EtherCAT Devices, then choose "Import Device XML" from its right-click menu.

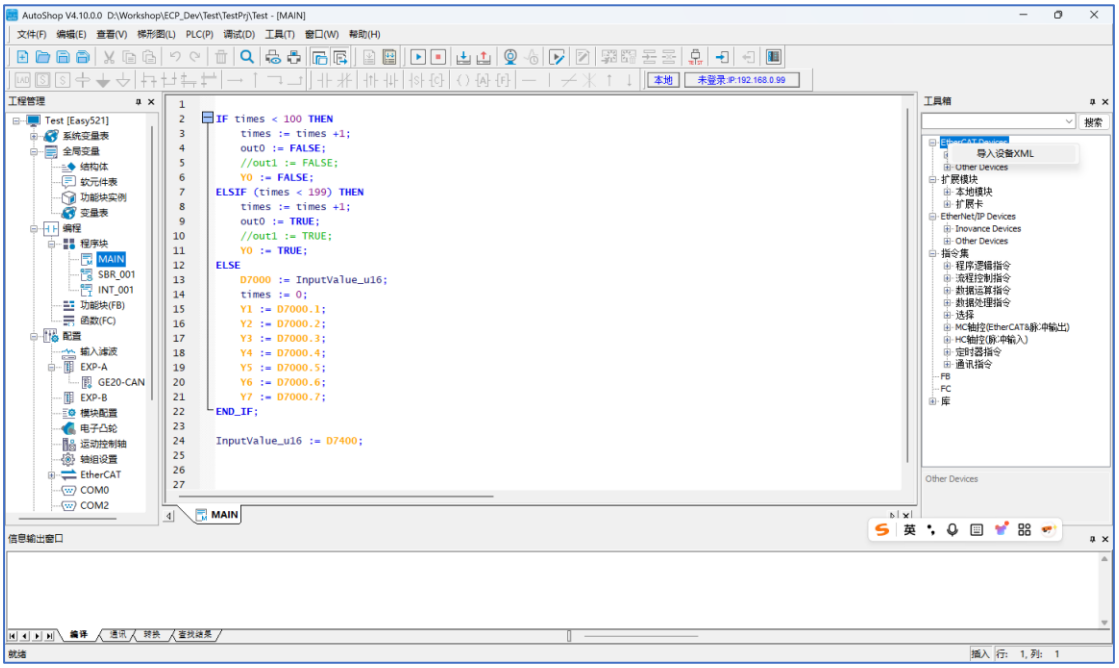

Take the file ECP01_V103_4.XML as an example. Select the file and click "Open" to complete the file import.

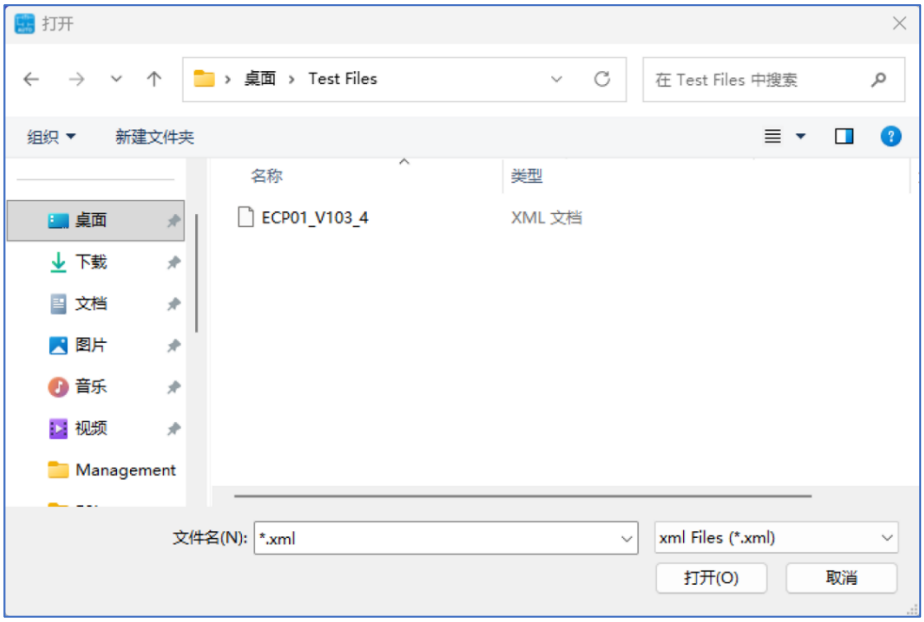

After importing the XML file, you need to restart AutoShop for the changes to take effect. After restarting AutoShop, the imported devices will be displayed under EtherCAT Devices / Other Devices in the toolbox.

9.4 Connect PLC

Connect to the PLC via Ethernet. It is required to configure the IP addresses of the PC and the PLC to be in the same network segment.

Click the "Test" button to get the connection result status.

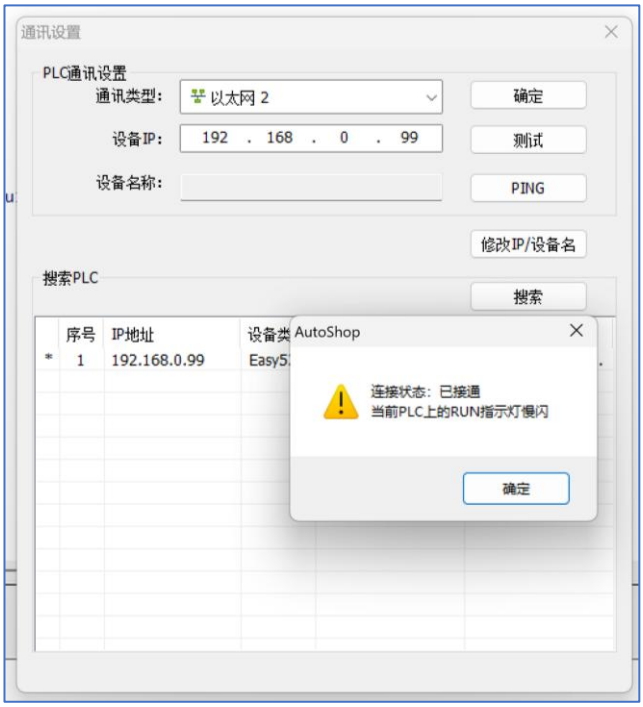

9.5 Add Devices

After establishing a connection with the PLC, select EtherCAT in project management, then choose “Auto Scan” from the right-click menu to open the scanning window. Click “Start Scan”, and the PLC will complete the scan of the EtherCAT network and detect the ECP01 device.

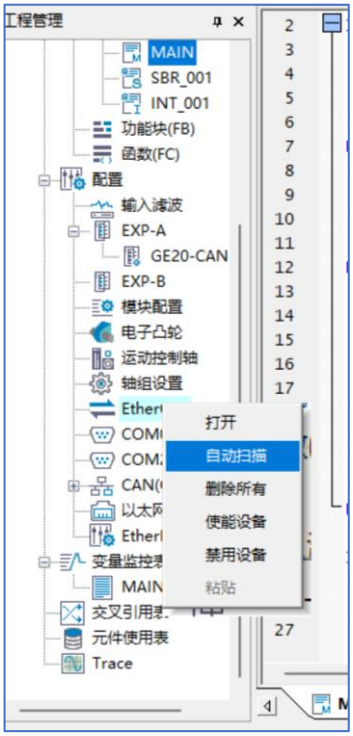

After completing the scan, click "Update Configuration". The EtherCAT devices detected by the scan will be added to the left pane and under EtherCAT in the project management.

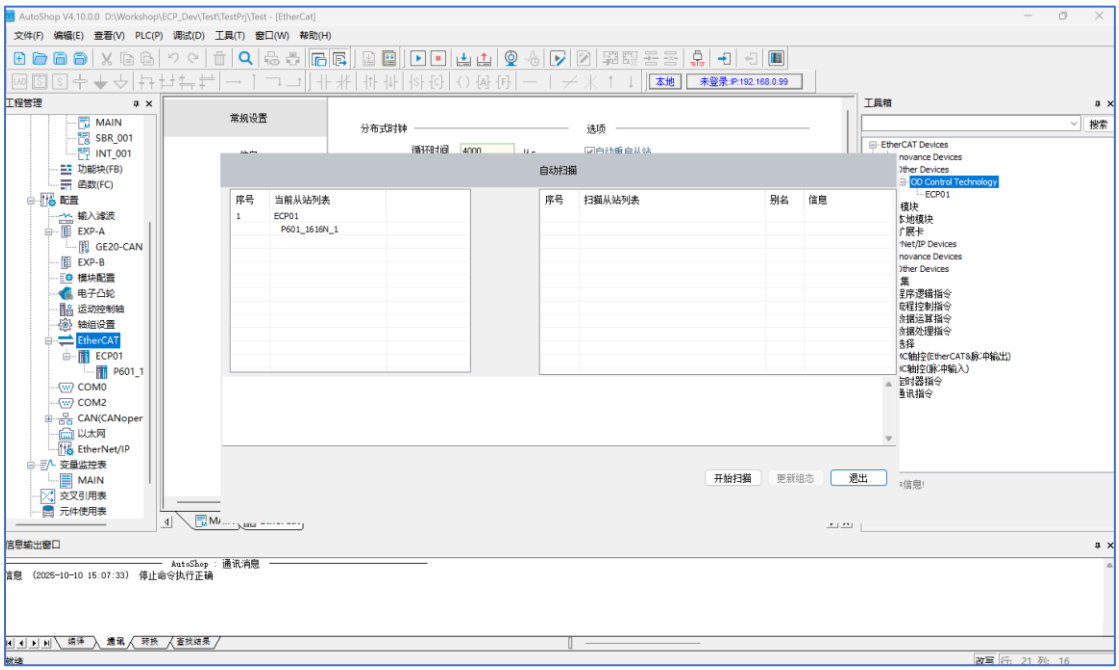

After closing the EtherCAT scan window, you can view the relevant information and configurations of EtherCAT devices via ECP01 or P601_1616N under EtherCAT.

9.6 Use of Data

Access the I/O function mapping page to configure the mapping between PDO data and user variables or system data. As shown in the figure, bind DO_00 of PDO to the user variable out0. Operations on out0 by the user program will cause changes to DO_00.

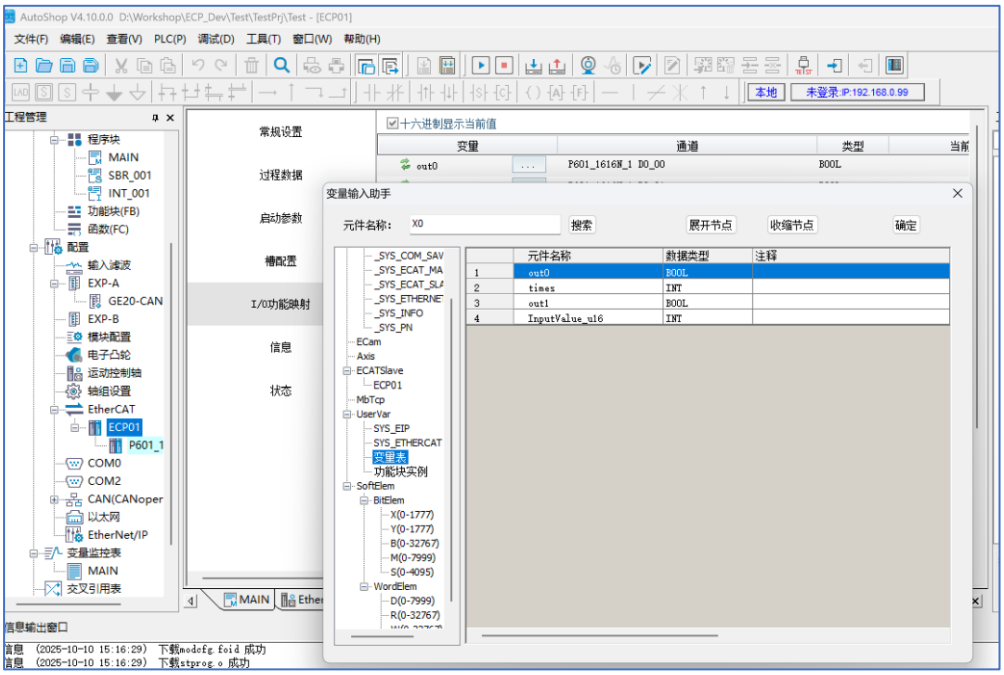

After compiling, downloading and running the program, ECP01 will enter the OP state.

10 Used in Sysmac Studio

10.1 Environment Preparation

One computer with Systmac Studio installed.

Several dedicated CAT5 cables for EtherCAT.

24VDC output switching power supply to supply power for ECP and COP series expansion modules.

Modules include:

1) NJ301

2) P601_1616N

3) P301_1616N

4) P301_1616N

PEtherCAT slave device description file ECP01_V103_4.XML for 601 _1616N (Example).

10.2 Create a New Project

Launch Sysmac Studio and select "New Project" in the startup window. On the project property setting page, configure information such as project name, author, controller model and version.

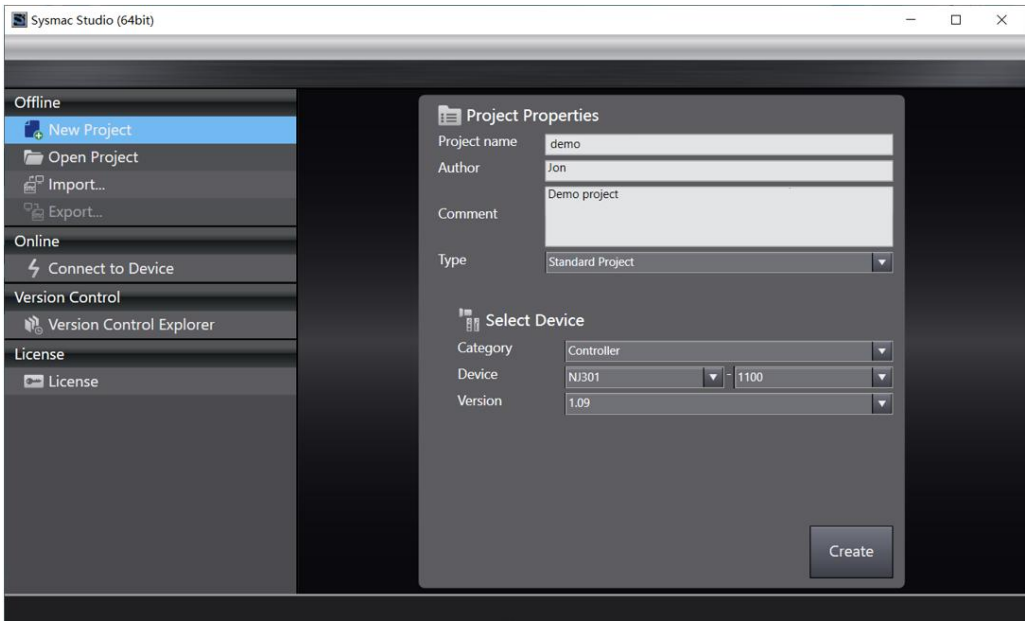

Click "Create" to enter the main page of the Sysmac Studio integrated development environment.

10.2.1 Connect the Controller

Launch the controller connection setting page via the menu "Controller\Communications Setup...".

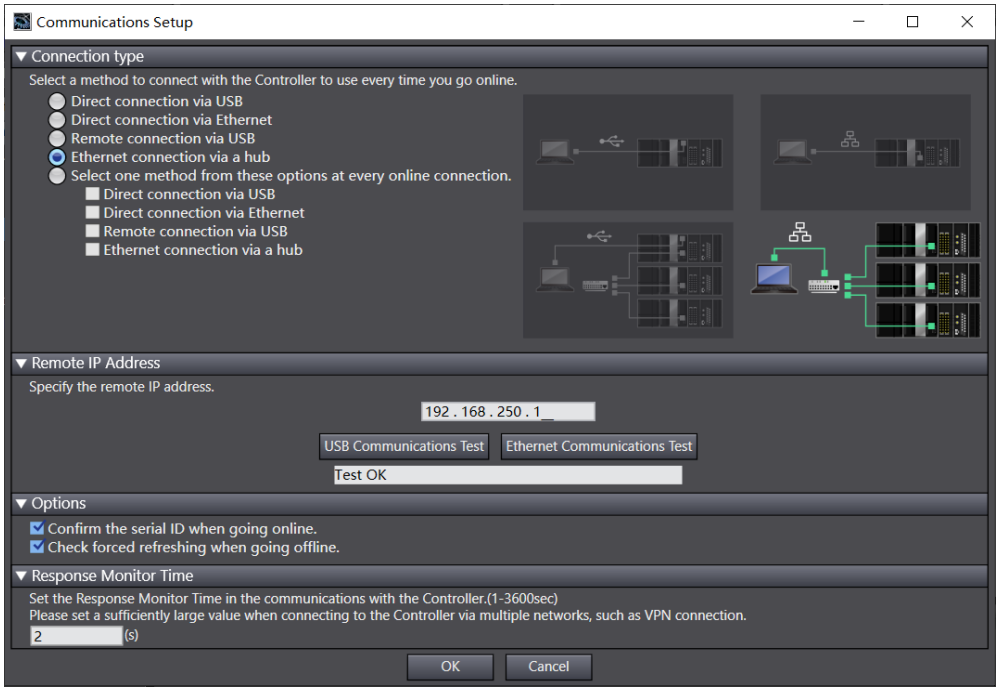

This example uses a USB-to-Ethernet HUB to connect the controller. Configure the settings as shown in the figure above and set the controlled IP address (the default IP is used in this example). If the IP address is set correctly, clicking the "Ethernet Communication Test" button will display the message "Test OK"; otherwise, connection to the controller will fail.

10.2.2 Import the ESI File

Double-click "Configuration and Setup/EtherCAT" in the project tree to open the EtherCAT network setting page. Select the EtherCAT master, then right-click and choose "Display ESI Library" to open the ESI library file list window.

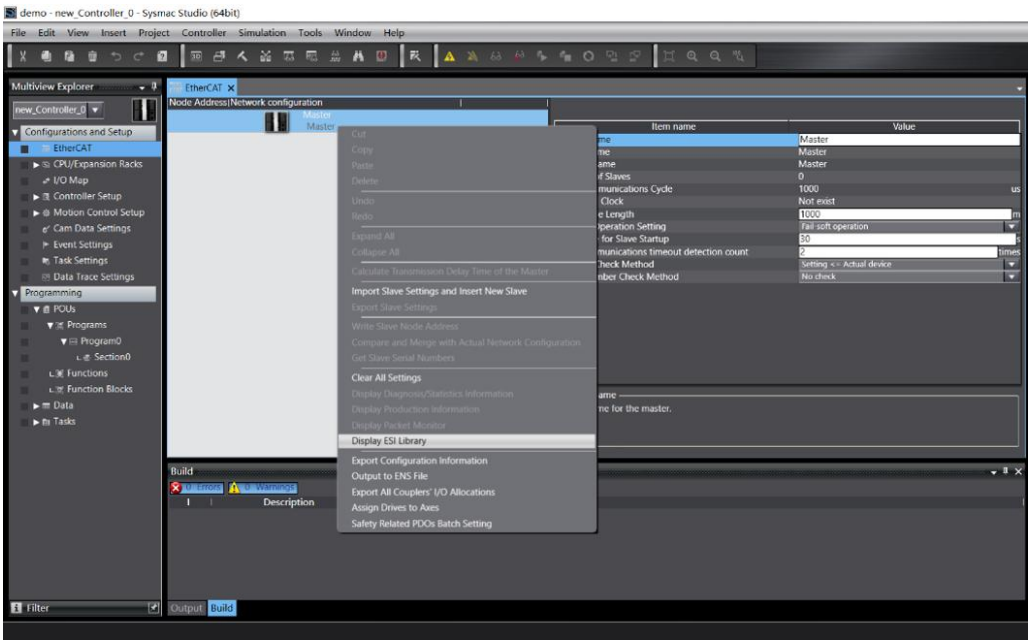

Click the "Install(File)" button and add the ECP01_xx.XML file. After adding the ESI file, you can find the ECP01 and COP series expansion module devices when adding devices.

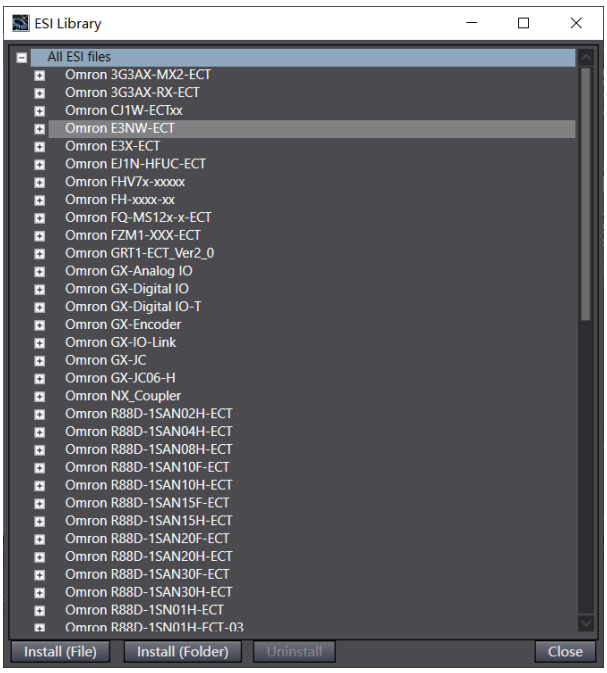

10.3 Add Devices

10.3.1 Add ECP01

Double-click "Configuration and Setup/EtherCAT" from the engineering tree menu to open the "Node Address and Network Configuration" page.

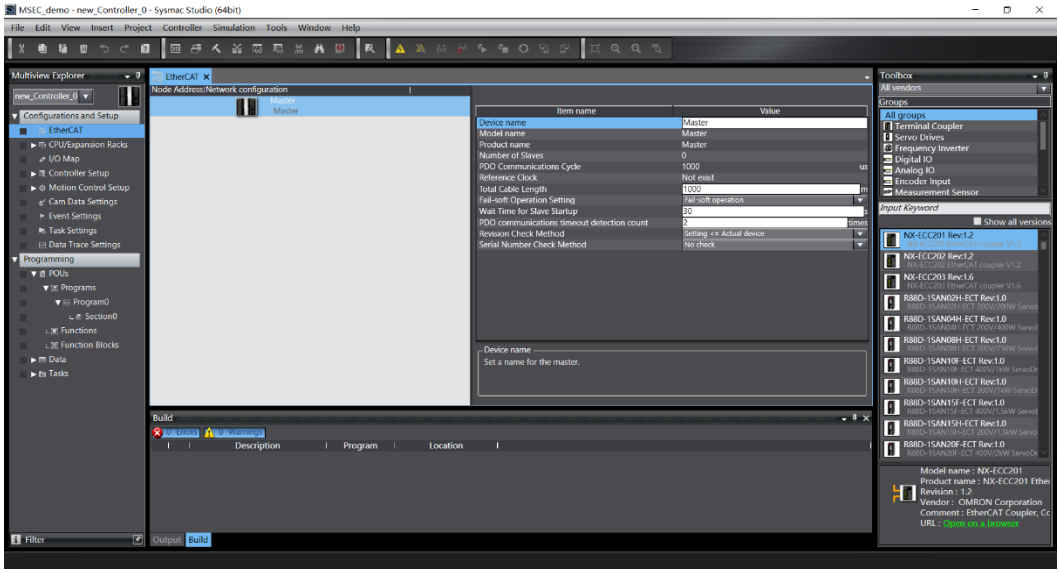

Select ECP01 from the Toolbox window on the right, right-click and choose "Insert". The device ECP01 will be connected to the controller network.

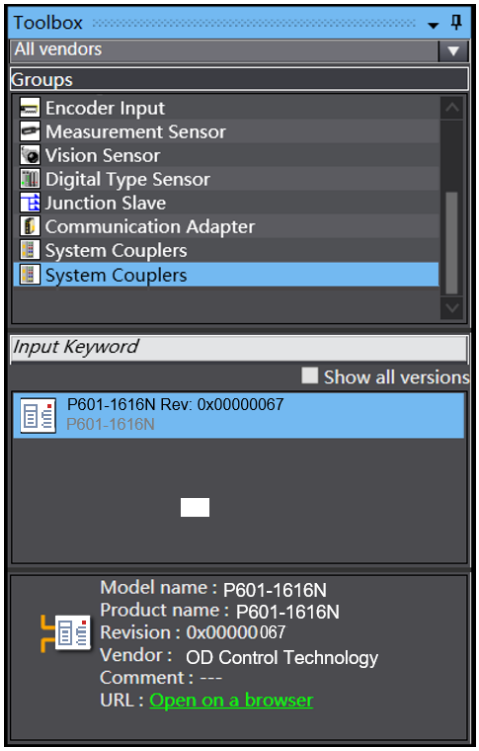

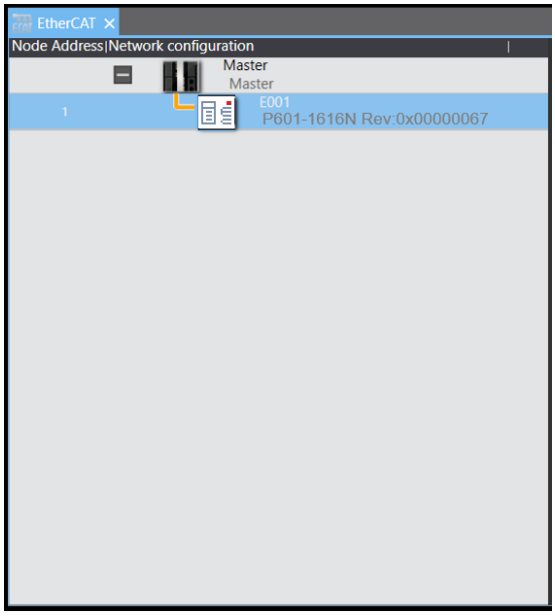

10.3.2 Add COP Series Modules

Double-click the EtherCAT/Node 1:ECP01 E001 device in the project tree to open the Slots configuration page of the coupler.

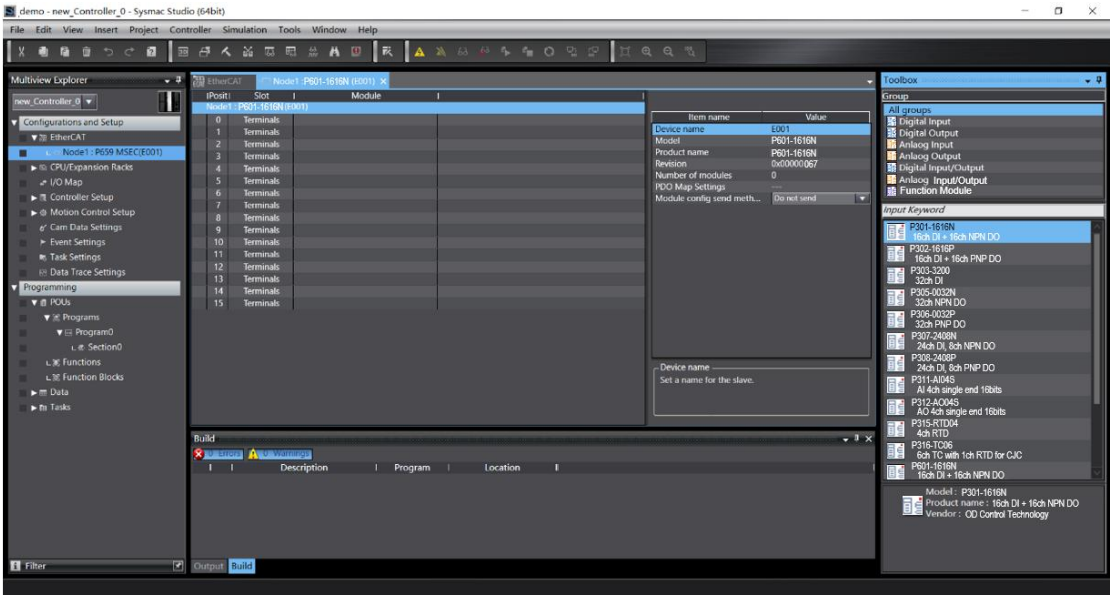

Add expansion modules in the order of the actual hardware connection of the expansion modules (you can also open the configuration window via the right-click menu of the coupler or the “Edit Module Configuration” button in the information display area on the right). Operation procedure: Select the Slot where the module is to be inserted, then choose the required module model from the right side, and right-click to select “Insert” to complete the module insertion operation.

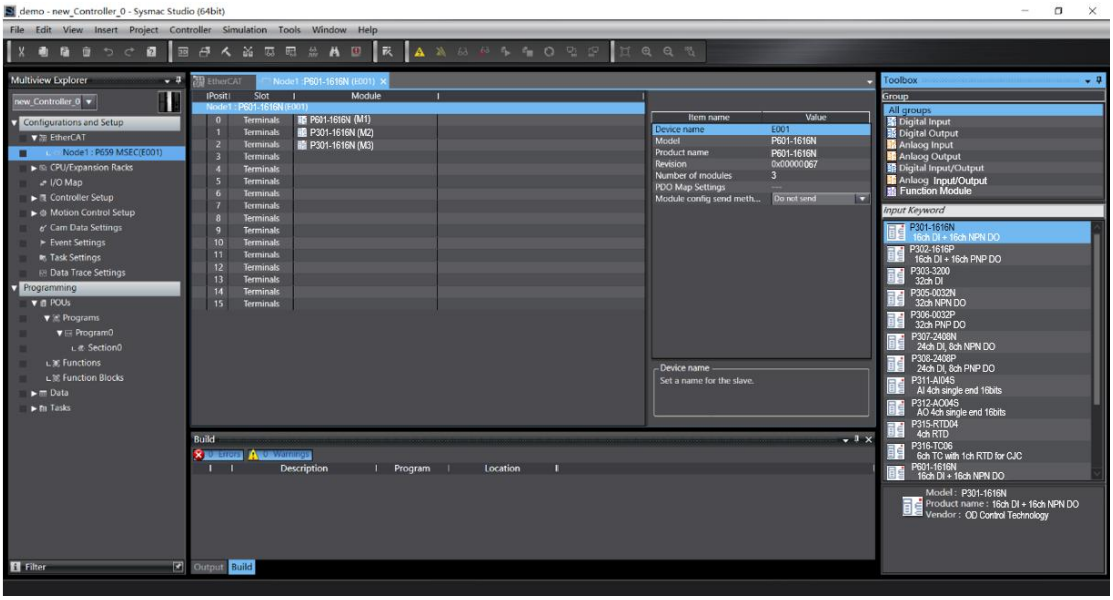

10.3.3 Node Address Setting

Enter the online mode via the menu "Controller/Online" (or the shortcut button). On the node and network configuration page, right-click the controller and select "Write Slave Node Address" from the pop-up menu to modify the node alias address of the coupler.

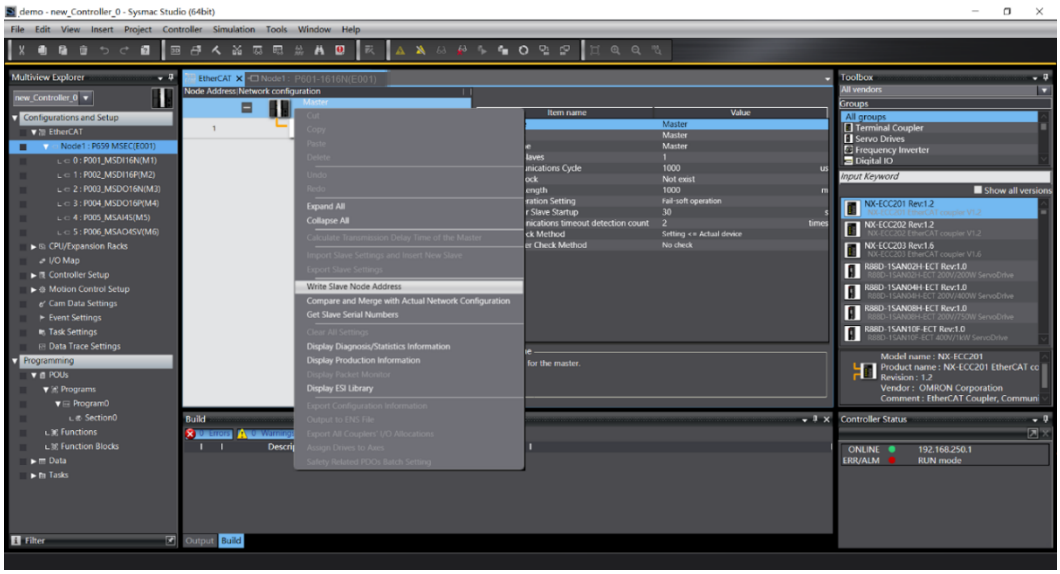

Double-click the address value on the right, and change it to the required alias address value. Take "1" in the figure as an example, then click the "Write" button to perform the address writing operation.

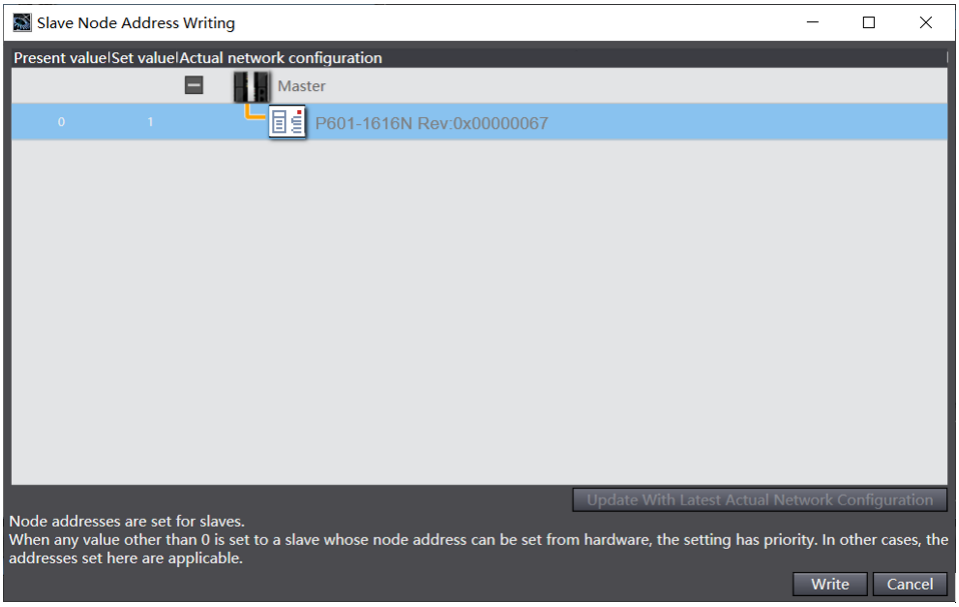

Click the "Write" button to complete the writing operation. After modifying the alias address, the coupler needs to be powered on again.

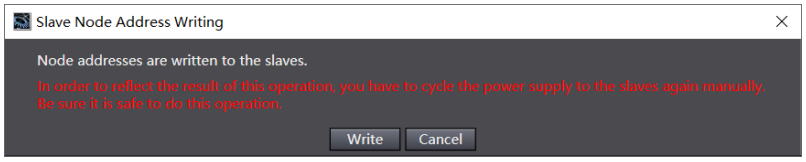

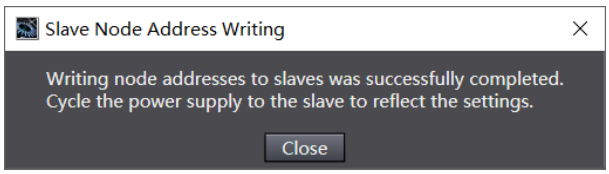

10.3.4 Download Settings

When the controller is online, click the "Synchronize" shortcut button. In the pop-up window, select "Transfer to Controller". After the operation is completed, the coupler enters the running state.

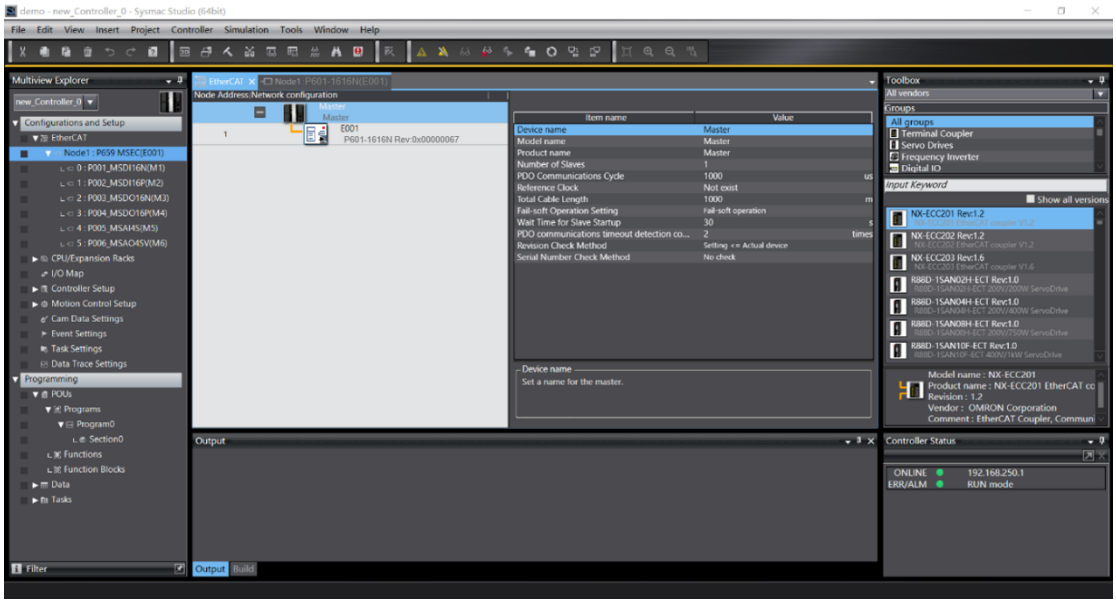

10.4 Data Usage and Observation

In online status, double-click the I/O Map to open the list of connected devices and process data, then you can view the status of communication data.

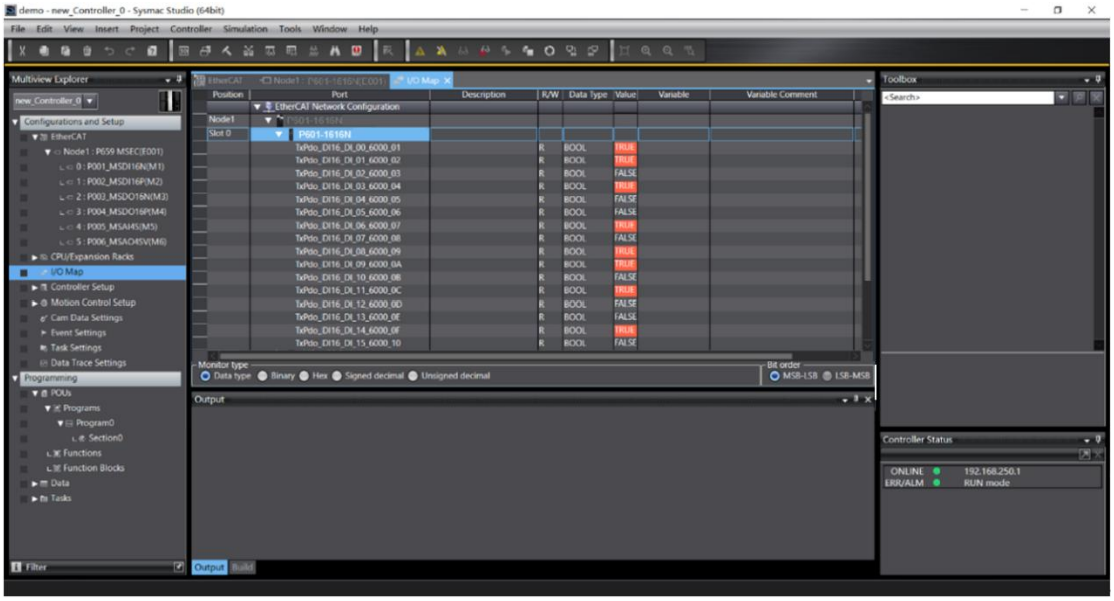

Users can also select output ports and set output values. For DO signals, the signal output status of the expansion module can be reflected.

After exiting the online status, go to the I/O Map page, select the PDO data of the expansion module, and choose "Create Device Variable" from the right-click menu to create device variables. These variables will be used as global variables and can be applied in user programs.

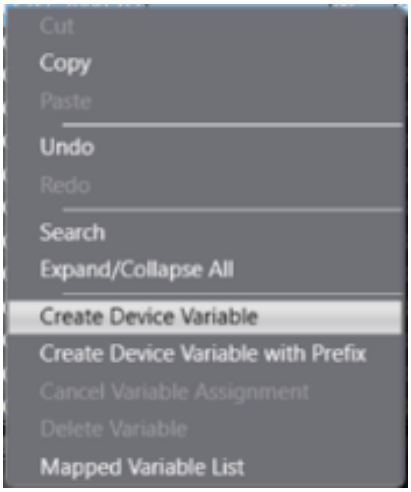
Cut
Copy
Paste
Undo
Redo
Search
Expand/Collapse All
Create Device Variable
Create Device Variable with Prefix
Cancel Variable Assignment
Delete Variable
Mapped Variable List

11 Used in Xinjie PLC

Taking the XLH24A16 PLC as an example, this paper introduces the application of ECP01 in Xinje small-sized PLCs.

11.1 Add ESI Files Manually

After installing the Xinje PLC programming tool software, you need to manually copy the device description file of ECP01 to the path plugins/ethercat/vendorxml/DefaultESI under the installation directory of XDPPro.

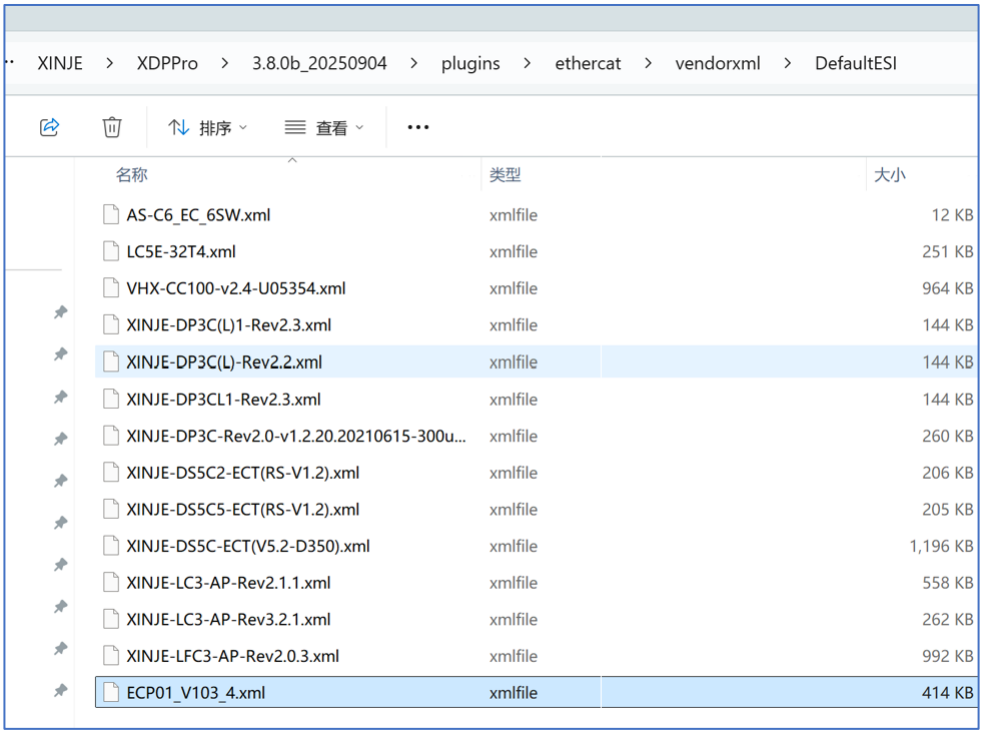

After copying the ESI file, you need to restart XDPPro for the copied ESI file to take effect. If the ESI file is not copied manually, EtherCAT will fail to recognize the type, information and other details of the scanned devices.

11.2 Connect to PLC

There are multiple ways to establish a connection between a PC and a PLC. Only Ethernet and device ID are used to set up the connection here. Users can adopt different connection methods to connect with the PLC according to their own needs.

Step 1: Option/software serial port settings, open communication configuration.

Step 2: Double-click the connection mode of Ethernet_Xnet_1 to open the connection operation page. Enter the device ID of the connected device (users may use other methods).

Step 3: Start the configuration service. Click "Configuration Service", then click "Start Service" in the pop-up window. The interface will display the prompt message "Service Running". Close the Xnet configuration service window.

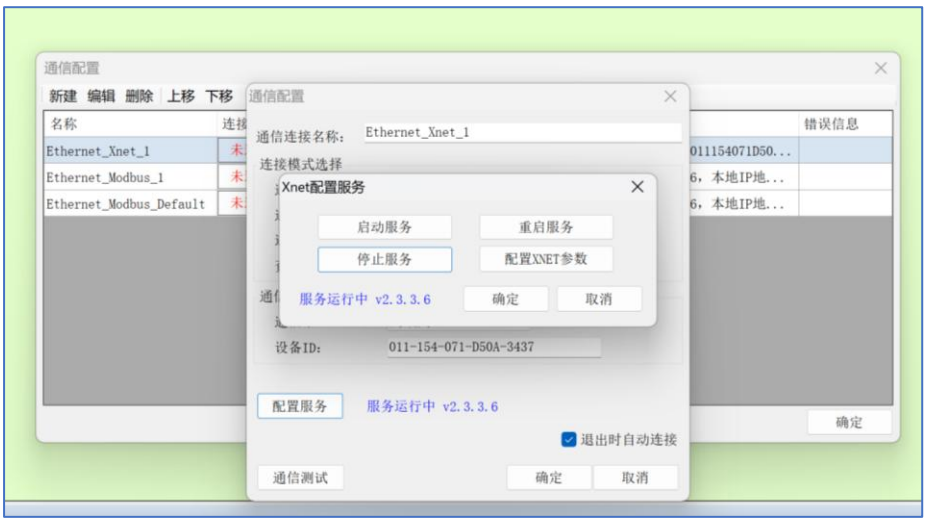

Step 4: Click “Communication Test” to connect to the PLC.

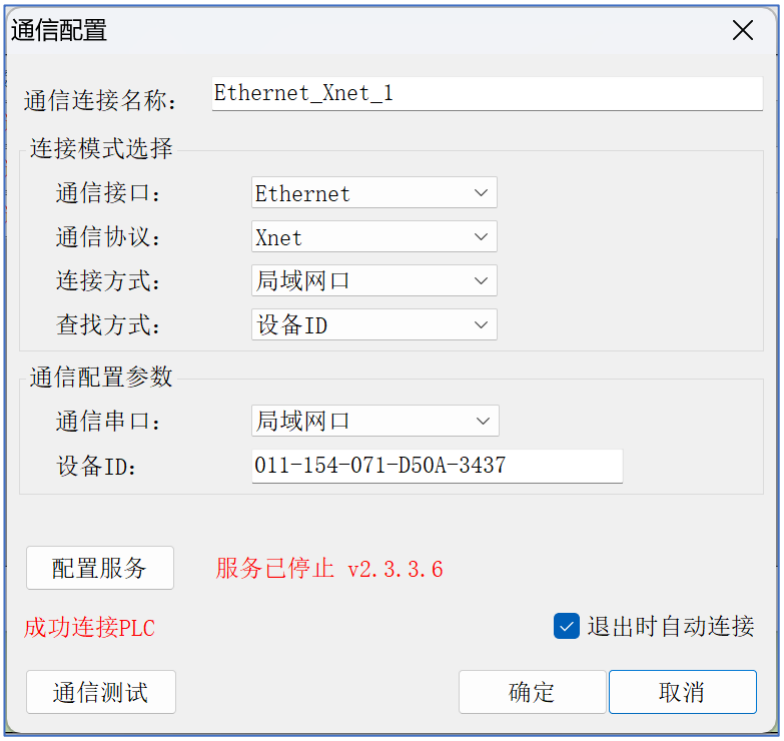

Other steps. If clicking "Communication Test" does not prompt "Successfully connected to PLC", you may need to launch XNetConfigTool via the Xnet configuration service page.。

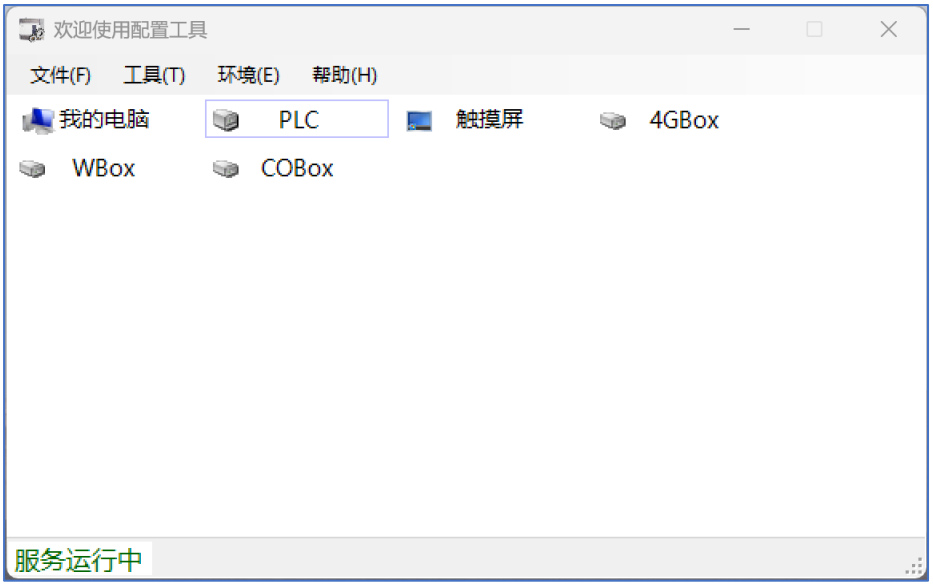

Select and double-click "PLC" to open the PLC connection device configuration window.

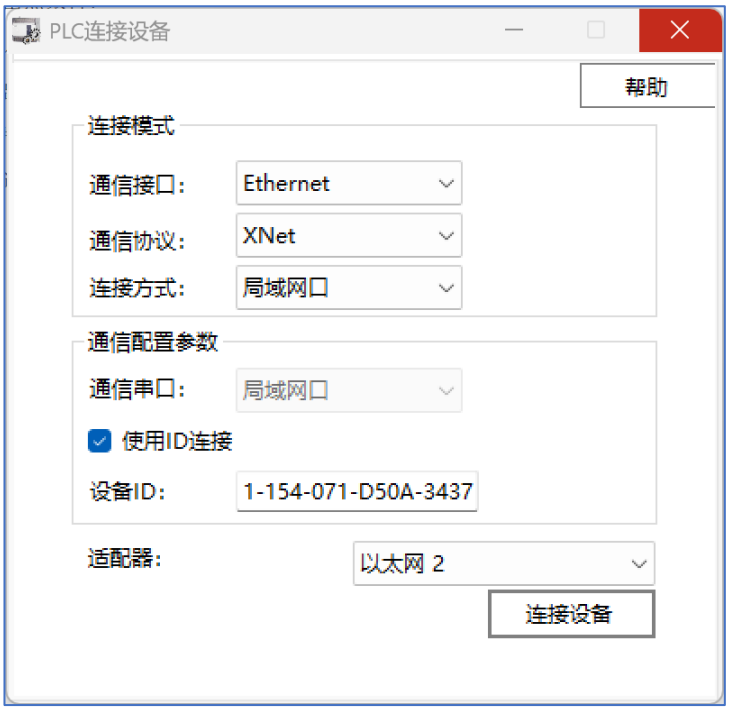

11.3 Scanning EtherCAT Devices

After establishing the PLC connection, double-click the “PLC Communication—EtherCAT Master” branch in the project tree to open the EtherCAT parameter configuration page. Click “Scan” in the upper-left corner to scan and identify the ECP01 device and its extended COP module.。

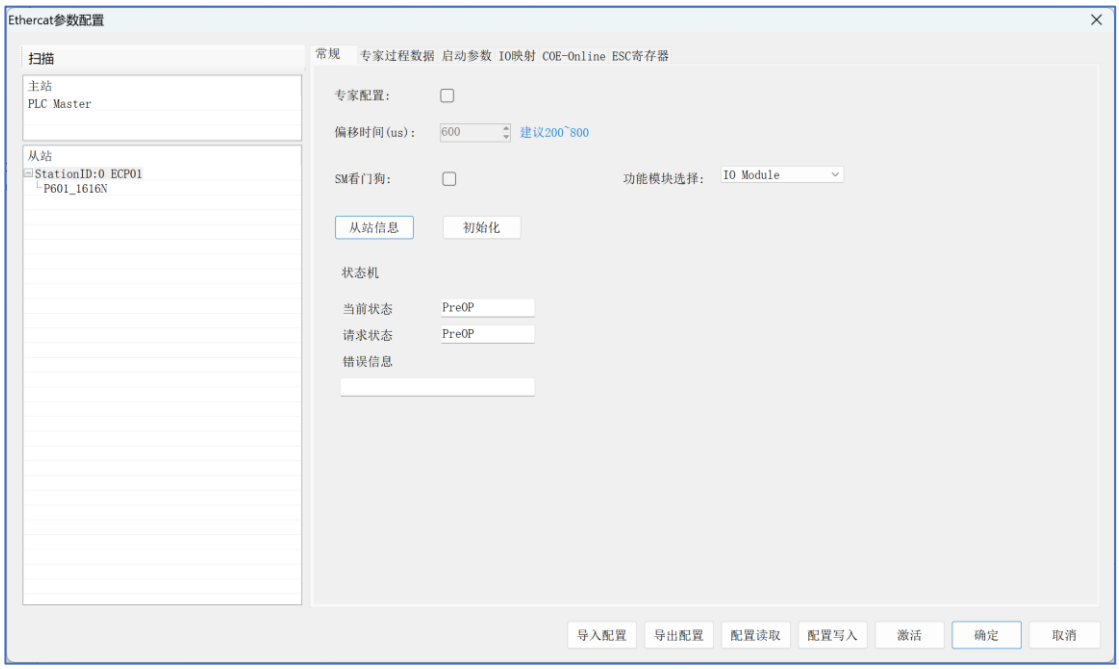

11.4 Data Mapping

Click the "Address Configuration" button on the IO mapping tab of the slave device to open the mapping configuration page for process data. Users can configure all slave stations at one time or perform mapping configuration for devices under each Slot individually.

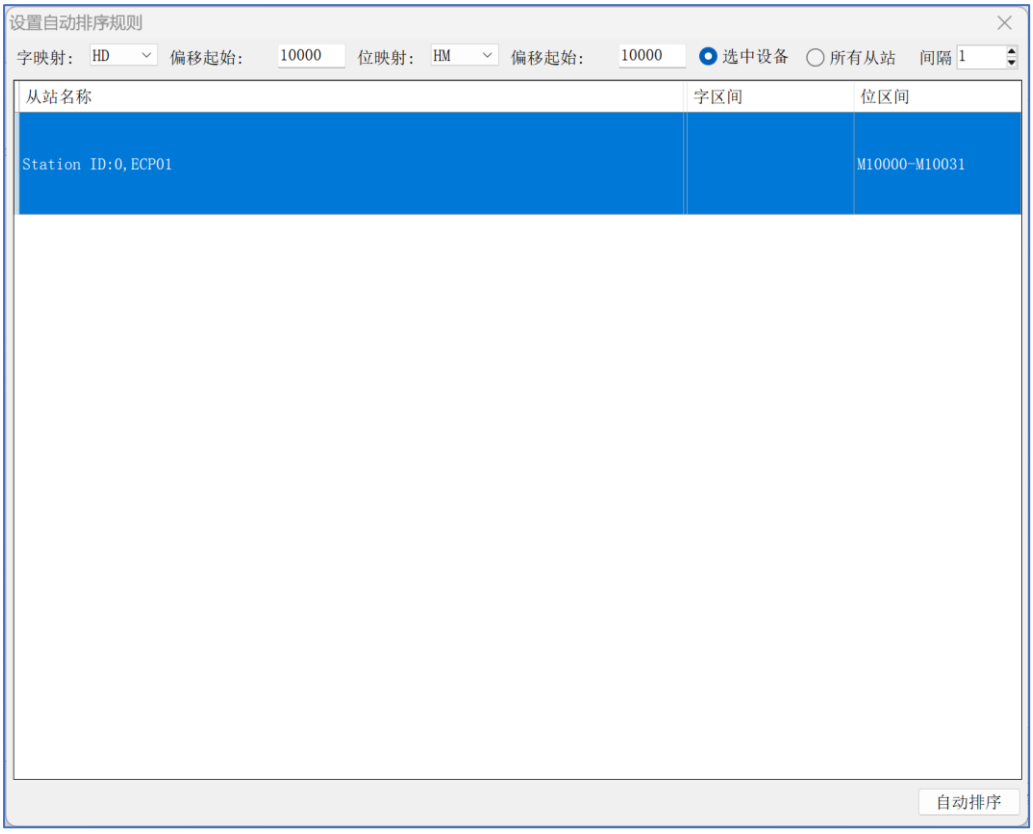

After clicking the "Auto Sort" button, the mapping relationship between each PDO data of the module

and the PLC data is shown in the figure below.

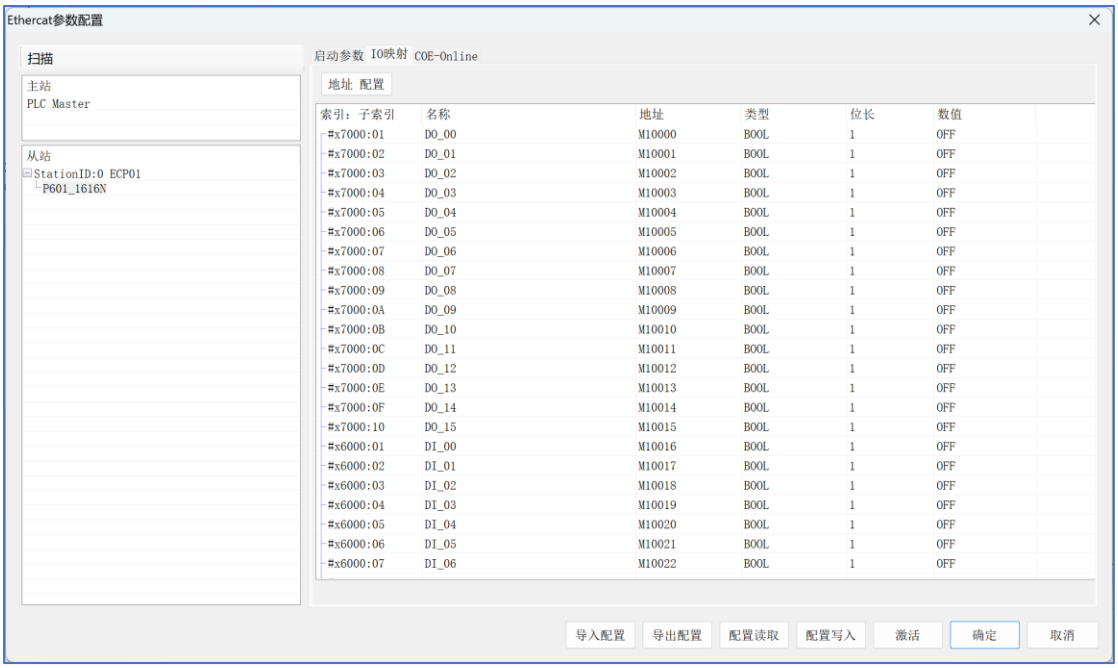

索引：子索引	名称	地址	类型	位长	数值
#x7000:01	DO_00	M10000	BOOL	1	OFF
#x7000:02	DO_01	M10001	BOOL	1	OFF
#x7000:03	DO_02	M10002	BOOL	1	OFF
#x7000:04	DO_03	M10003	BOOL	1	OFF
#x7000:05	DO_04	M10004	BOOL	1	OFF
#x7000:06	DO_05	M10005	BOOL	1	OFF
#x7000:07	DO_06	M10006	BOOL	1	OFF
#x7000:08	DO_07	M10007	BOOL	1	OFF
#x7000:09	DO_08	M10008	BOOL	1	OFF
#x7000:0A	DO_09	M10009	BOOL	1	OFF
#x7000:0B	DO_10	M10010	BOOL	1	OFF
#x7000:0C	DO_11	M10011	BOOL	1	OFF
#x7000:0D	DO_12	M10012	BOOL	1	OFF
#x7000:0E	DO_13	M10013	BOOL	1	OFF
#x7000:0F	DO_14	M10014	BOOL	1	OFF
#x7000:10	DO_15	M10015	BOOL	1	OFF
#x6000:01	DI_00	M10016	BOOL	1	OFF
#x6000:02	DI_01	M10017	BOOL	1	OFF
#x6000:03	DI_02	M10018	BOOL	1	OFF
#x6000:04	DI_03	M10019	BOOL	1	OFF
#x6000:05	DI_04	M10020	BOOL	1	OFF
#x6000:06	DI_05	M10021	BOOL	1	OFF
#x6000:07	DI_06	M10022	BOOL	1	OFF

12 Appendix

12.1 Troubleshooting of Common Issues

Q1: Failed to find the EtherCAT slave device of the ECP module.

A: First confirm that the ECP module is correctly connected to the EtherCAT IN interface, and check whether the network cable is faulty (observe if the LA indicator light of the connected network port is blinking). Replace and reconnect the network cable if necessary.

If the ECP module is used for the first time, import the ESI file of the ECP device on the EtherCAT master device side, then perform device configuration and scanning operations to detect the device. Ensure that the EtherCAT master device conducts slave device detection and configuration after the ECP device is powered on and enters the working state.

Q2: The ECP module fails to enter the OP state.

A: Troubleshoot and verify the Ethernet cable connection indicators by checking hardware connection issues as described in Q1.

Check whether the ECP device settings on the EtherCAT master side match the actual connected devices, such as the sequence of expansion modules (corresponding to the ascending order of COP device IDs).

Verify whether an alias address is configured for the ECP device and if it is consistent with the alias address setting in the EtherCAT master, and confirm that the alias address function is enabled in the master.

If the module connection configured on the EtherCAT master matches the actual sequence and type of ECP modules, check the DIP switch settings of the COP module. BIT5 shall be set to OFF and BIT6 to OFF; the module types corresponding to BIT1~BIT3 set in ascending ID order shall be consistent with the P3xx module types configured on the master side.

Check if the COP module at the farthest end of the CAN network where ECP modules are deployed has BIT7 set to ON, while all other COP modules on the same CAN network have BIT7 set to OFF.

Q3: The COP module extended by the ECP module cannot be recognized.

A: First, troubleshoot the hardware connection status of the CAN network of the ECP module to ensure normal network connection and no faults in the network cable, so that the CAN RUN indicator light stays steadily on after the ECP is powered on. If the problem still exists, check the DIP switch settings of the COP module. BIT5 shall be set to OFF, BIT6 to OFF, and there shall be no duplicate settings for BIT1~BIT3 of the ID configuration.

Check whether BIT7 of the COP module arranged at the farthest end of the CAN network of the ECP module is set to ON, while BIT7 of other COP modules in the same CAN network is set to OFF.

Q4: The EtherCAT ERR indicator light on the ECP module is flashing.

A: First, troubleshoot and confirm that the hardware connections of the ECP module and the COP module connected to its extended CAN interface are reliable.

Second, check whether the module connection settings configured on the EtherCAT master are consistent with the actual sequence and type of ECP modules, which must be kept consistent; check the DIP switch settings of the COP module. BIT5 shall be set to OFF and BIT6 to OFF, and the module types corresponding to BIT1~BIT3 set in ascending order of ID shall match the type of P3xx modules configured on the master side.

Then, check whether the alias address configuration is enabled in the EtherCAT master. If this function is enabled, ensure that the alias address configuration is consistent with that in the ECP module.

Q5: The LS indicator light on the ECP module is flashing.

A: The LS indicator is used to indicate the operating status of the local bus of the ECP module. The LS indicator starts flashing when a local bus communication fault occurs. Therefore, when the LS indicator flashes, please check the baud rate setting DIP switches of all COP devices connected to the CAN network. Set BIT5=OFF and BIT6=OFF, and ensure no duplicate ID settings. For the terminal resistor setting of BIT7, only the COP device at the farthest end shall be set to ON.

In addition, consideration should be given to external interference affecting the CAN network. Ensure the network cable is well shielded and routed away from interference sources.

Q6: The ERR indicator of the CAN interface on the ECP module (or on the COP module) is flashing.

A: The ERR indicator of the CAN interface reflects the operating status of the CAN network. If it flashes, first check whether the physical connections of all COP devices connected to the CAN network are normal. After troubleshooting, check the baud rate settings on the DIP switches of each module, which shall be set to BIT5=OFF and BIT6=OFF, and confirm no duplicate ID settings. For the terminal resistor setting of BIT7, only the COP at the farthest end shall be set to ON.

In addition, external interference on the CAN network shall be taken into account. Ensure the network cable is well shielded and routed away from interference sources.

Q7：The COP module connected to the CAN bus cannot be recognized.

A: First, check whether the physical connections of all COP devices connected to the CAN network are normal. After troubleshooting, verify the baud rate settings on the DIP switches of each module. The set baud rate must be consistent with that of the CAN master device (if third-party CAN devices are involved, their baud rates must also be set to the same value), and confirm there are no duplicate ID settings. For the terminal resistor setting BIT7, only the COP module at the farthest end shall be set to ON.

In addition, external interference on the CAN network should be taken into account. Ensure the network cable is well shielded and routed away from interference sources.

12.2 Conversion Relationships of Temperature Units

In the application of temperature testing modules, the following three temperature units are commonly used, and their conversion relationships are as follows:

Temperature Units	Convert to degrees Celsius ℃	Convert to Fahrenheit℉	Convert to Kelvin K
Celsius °C	—	°F = °C × 9/5 + 32	K = °C + 273.15
Fahrenheit °F	°C = (°F − 32) × 5/9	—	K = (°F − 32) × 5/9 + 273.15
Kelvin K	°C = K − 273.15	°F = K × 9/5 − 459.67	—

Common Temperature Point:

- Freezing point of water: 0 ° C = 32 ° F = 273.15 K

- Boiling point of water: 100 ° C = 212 ° F = 373.15 K

- Absolute Zero: −273.15 °C = −459.67 °F = 0 K