UM002_COP Series Remote IO Modules User Manual_V1.0

V1.0

南京欧迪通控制技术有限公司

Nanjing OD Control Technology Co., Ltd.

History Log

NO.	Version	Modification Log	Modifier	Date
1	V1.0	Newly created.	ODControl	2026-05-16
2				
3				
4				
5				

Contents

History Log ..... - 1 -
1 Product Introduction ..... - 1 -
1.1 Product Features ..... - 1 -
1.2 COP Series Modules ..... - 1 -
1.3 Indicator Light Meaning ..... - 3 -
1.4 Specification Parameters ..... - 4 -
1.4.1 Basic Specifications ..... - 4 -
1.4.2 Environmental Specifications ..... - 4 -
1.4.3 Digital Input Specifications ..... - 5 -
1.4.4 Digital Output Specifications ..... - 5 -
1.4.5 Relay Output Specifications ..... - 6 -
1.4.6 Analog Input Specifications ..... - 7 -
1.4.7 Analog Output Specifications ..... - 7 -
1.4.8 Specifications of RTD Module ..... - 8 -
1.4.9 Specifications of Thermocouple Module ..... - 9 -
1.5 Typical Application ..... - 12 -
1.5.1 Node Address Setting ..... - 13 -
1.5.2 Baud Rate Setting ..... - 14 -
1.5.3 Termination Resistor Configuration ..... - 14 -
2 Mechanical Installation ..... - 15 -
2.1 Installation Dimensions ..... - 16 -
2.2 Installation Method ..... - 17 -
2.3 Disassembly Method ..... - 17 -
3 Electrical Installation ..... - 19 -
3.1 Wiring Precautions ..... - 19 -
3.2 Cable Selection ..... - 19 -
3.3 Interface Signal Identification ..... - 20 -
3.4 Terminal Wiring ..... - 22 -
3.4.1 Digital Input ..... - 22 -
3.4.2 Digital Output ..... - 23 -
3.4.3 Relay Output ..... - 25 -
3.4.4 Analog Input ..... - 25 -
3.4.5 Analog Output ..... - 26 -
3.4.6 RTD Temperature Sampling ..... - 26 -
3.4.7 Thermocouple Temperature Sampling ..... - 27 -
4 COP Series Modules Configuration Parameters ..... - 29 -
4.1 Digital Input Configuration Parameters ..... - 29 -
4.1.1 Digital Input Polarity ..... - 29 -

4.1.2 Digital Input Filtering ..... - 29 -
4.2 Digital Output Configuration Parameters ..... - 30 -
4.2.1 Digital Output Polarity ..... - 30 -
4.2.2 Output Mode When Digital Output Is Abnormal ..... - 30 -
4.2.3 Output Value When Digital Output Is Abnormal ..... - 30 -
4.2.4 Digital Output Port Shielding ..... - 30 -
4.3 Analog Input Configuration Parameters ..... - 31 -
4.3.1 Analog Input Signal Type ..... - 31 -
4.3.2 Analog Input Offset ..... - 31 -
4.3.3 Gain Compensation Coefficient ..... - 32 -
4.4 Analog Output Configuration Parameters ..... - 33 -
4.4.1 Analog Output Mode and Output Value ..... - 33 -
4.4.2 Analog Output Offset ..... - 33 -
4.4.3 Gain Compensation Coefficient ..... - 34 -
4.4.4 Output Mode and Output Value ..... - 34 -
4.5 RTD Configuration Parameterse ..... - 35 -
4.5.1 Types of Thermal Resistance Sensors ..... - 35 -
4.5.2 Temperature Offset ..... - 35 -
4.5.3 Gain Compensation Coefficient ..... - 36 -
4.5.4 RTD Temperature Alarm Detection ..... - 36 -
4.5.5 Filtering Level ..... - 37 -
4.5.6 Sampling Time ..... - 37 -
4.5.7 Module Status Parameters ..... - 37 -
4.5.8 Temperature Unit ..... - 38 -
4.5.9 Temperature Offset Value ..... - 38 -
4.6 TC Configuration Parameters ..... - 38 -
4.6.1 Types of Thermocouple Sensors ..... - 39 -
4.6.2 Thermocouple Offset ..... - 40 -
4.6.3 Thermocouple Gain Compensation Coefficient ..... - 40 -
4.6.4 Thermocouple Temperature Alarm Detection ..... - 41 -
4.6.5 Filtering Level ..... - 41 -
4.6.6 Sampling Time ..... - 42 -
4.6.7 Module Status Parameters ..... - 42 -
4.6.8 Cold Junction Temperature Compensation ..... - 42 -
4.6.9 Temperature Unit ..... - 42 -
4.6.10 Temperature Offset Value ..... - 43 -
5 PDO Mapping ..... - 44 -
5.1 P301-1616N/P302-1616P ..... - 44 -
5.2 P303-3200 ..... - 45 -
5.3 P305-0032N/P306-0032P ..... - 45 -
5.4 P307-2408N/P308-2408P ..... - 46 -
5.5 P309-0008R ..... - 47 -

5.6 P311-AI04S ..... - 48 -
5.7 P312-AO04S ..... - 48 -
5.8 P315-RTD04 ..... - 49 -
5.9 P316-TC04 ..... - 50 -
6 Network Configuration ..... - 52 -
6.1 Connection with ECP Series Products ..... - 52 -
6.1.1 Baud Rate Setting ..... - 52 -
6.1.2 ID Setting ..... - 52 -
6.1.3 Terminal Resistor Setting ..... - 53 -
6.2 Connection with CAN Master ..... - 53 -
7 Work with Inovance Compact PLC ..... - 54 -
7.1 Example of Control System Construction ..... - 54 -
7.2 Software Environment Configuration ..... - 54 -
7.2.1 Create a New Project ..... - 54 -
7.2.2 Select CAN Configuration ..... - 55 -
7.2.3 Add CAN Module ..... - 56 -
7.2.4 Add CAN Configuration ..... - 56 -
7.2.5 Add CAN Device ..... - 57 -
7.2.6 Configure Device Parameters ..... - 58 -
7.2.7 Master Configuration ..... - 62 -
7.3 Test Routine ..... - 64 -
8 Appendix ..... - 65 -
8.1 Troubleshooting of Common Issues ..... - 65 -
8.2 Conversion Relationships of Temperature Units ..... - 66 -
8.3 CANopen Object Dictionary ..... - 67 -
8.3.1 P301/P302 Object Dictionary ..... - 69 -
8.3.2 P303 Object Dictionary ..... - 70 -
8.3.3 P305/P306 Object Dictionary ..... - 70 -
8.3.4 P307/P308 Object Dictionary ..... - 71 -
8.3.5 P309 Object Dictionary ..... - 71 -
8.3.6 P311 Object Dictionary ..... - 72 -
8.3.7 P312 Object Dictionary ..... - 73 -
8.3.8 P315 Object Dictionary ..... - 74 -
8.3.9 P316 Object Dictionary ..... - 76 -
8.4 Firmware Updating ..... - 78 -

Safety Precautions and Disclaimer

- **Safety Statement:**

1. Please read the user manual thoroughly before using the ECP series remote IO module.
2. During the installation, operation and maintenance of the product, ensure that all operations will not cause personal injury or equipment damage. Relevant work shall be performed by qualified technical personnel.
3. This product shall be used in an environment that meets the design specifications. Functional abnormalities, equipment damage and other issues caused by failure to comply with relevant regulations are not covered by the product quality warranty.
4. Our company shall not assume any legal liability for safety accidents, property losses and other consequences arising from improper operation of this product.

- **Safety Tip:**

1. When disassembling, assembling and wiring the product, ensure the operations will not cause any safety hazards.
2. On the premise of no safety risks, it is recommended to disconnect all external power supplies of the system before performing disassembly, assembly and wiring operations.
3. During installation, wiring and maintenance, prevent metal scraps, wire ends and other conductive debris from falling into the equipment interior, as this may lead to equipment damage, malfunctions and incorrect operation.
4. After installation, ensure good heat dissipation and ventilation for the equipment to avoid abnormal operation.
5. Secure the equipment firmly during installation; improper installation may result in product falling off, unstable operation and other abnormal conditions.
6. Wiring shall comply with basic electrical safety principles, and installation and maintenance operations such as wiring and connection shall be performed by professional personnel with sufficient electrical knowledge.
7.

- **Disclaimer**

Due to the continuous update and improvement of products and technologies, the content in this document will be updated alongside actual products and may contain discrepancies. Please refer to the corresponding product version or the actual product for accuracy.

We reserve the right to modify the content due to product upgrades and updates without prior notice.

- **Warranty Statement**

Under normal use, if the product malfunctions or gets damaged, OD Control Technology will provide warranty service within the warranty period (please refer to the order form for the product warranty period). Repair fees will be charged for products out of warranty.

Within the warranty period, repair fees will be charged for product damage caused by the following circumstances.

- Product damage caused by failure to operate in accordance with the provisions in the manual.
- Product damage caused by use beyond the specified scope of the product.
- Product damage caused by using this product for non-intended functions.
- Product damage caused by fire, flood, or abnormal power supply such as voltage fluctuation.
- Product damage caused by force majeure events (natural disasters, earthquakes, lightning strikes).

- **Copyright Statement**

Copyright © Nanjing OD Control Technology Co., Ltd. 2026. All rights reserved.

The copyright of this material belongs to Nanjing OD Control Technology Co., Ltd. Without the written permission of the Company, no entity or individual may arbitrarily excerpt, reproduce, modify or translate this material, nor disseminate it in any form.

Infringement will be prosecuted.

1 Product Introduction

The COP series products can be connected to controllers/PLCs that support the CANopen master to achieve the expansion of remote modules and easily realize flexible configuration of hardware interface resources. They can also be connected to ECP series modules to link the modules to EtherCAT master devices and build a control system with EtherCAT master devices such as PLCs.

1.1 Product Features

The COP series products establish communication with external devices via the CAN interface, and can connect with mainstream CAN master station PLC devices on the market to achieve system interface expansion. The CAN master station can manage and control COP series expansion modules through the CANopen CiA401 protocol. It features the following functions:

- Supports standard communication mechanisms such as PDO, SDO, NMT and EMCY.
- Supports heartbeat messages to monitor device online status.
- Provides EDS files and supports master station import.
- Baud rate: 125kbps, 250kbps, 500kbps, 1000kbps.
- Node ID: Configurable via DIP switch (1~16). A single CAN network allows access for up to 16 COP series modules.
- Configurable terminal resistance. The connection or disconnection of terminal resistance can be set via DIP switch.
- The COP series expansion modules can realize data transmission priority through ID configuration.
- The expansion modules support a communication distance of up to 25 meters from the coupler, enabling decentralized module installation, simplifying wiring and reducing wiring costs.
- With a module thickness of 21.5mm and 32 IO interfaces, it supports close-fit installation, saving 20% of electrical cabinet space compared with common plug-in IO modules on the market.

1.2 COP Series Modules

The COP series products adopt communication based on the CAN bus, comply with the CiA401 design specification, and can be connected to master station devices supporting the CANopen protocol. Multiple COP devices can be cascaded to construct modules with different combinations, forming a control system that

Copyright © Nanjing OD Control Technology Co., Ltd.

meets multi-interface requirements. A single CAN network supports the cascading of up to 16 COP devices.

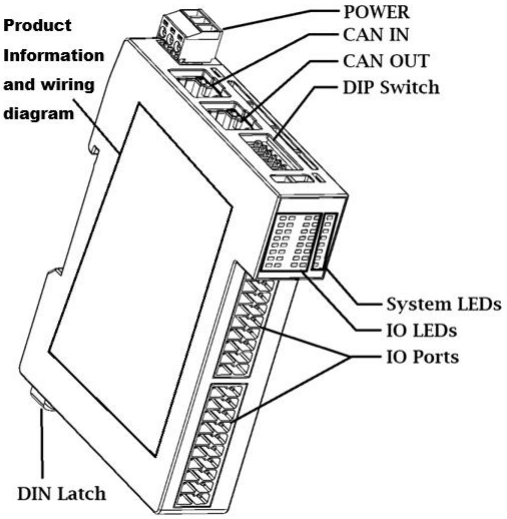

Figure 1 COP Series Products

Module Description:

P301 - 16 16 N
① ② ③ ④

①	Product No.: The unique code of the product
②	Number of digital input channels, displayed as a decimal value
③	Number of digital output channels, displayed as a decimal value
④	Type of output port, N: NPN type / sink type, P: PNP type / source type

P311 - AI 04 S
① ② ③ ④

①	Product No.: The unique code of the product
②	Module signal types: AI stands for analog input signal, AO stands for analog output signal, RTD stands for Resistance Temperature Detector and TC stands for Thermocouple
③	Number of channels: Expressed as a decimal value
④	Signal types: S: Single-ended differential, D: True differential

The COP series modules support multiple signal types for user selection. Please refer to the list below for detailed product model descriptions.

Product No.	Modules	Description
P301-1616N	COP01	16-channel NPN/PNP digital input, 16-channel NPN digital output module
P302-1616P	COP02	16-channel NPN/PNP digital input, 16-channel PNP digital output module
P303-3200	COP03	32-channel NPN/PNP Digital Input Module
P305-0032N	COP05	32-channel NPN digital output module
P306-0032P	COP06	32-channel PNP digital output module
P307-2408N	COP07	24-channel NPN/PNP digital input, 8-channel NPN digital output module

Product No.	Modules	Description
P308-2408P	COP08	24-channel NPN/PNP digital input, 8-channel PNP digital output module
P309-0008R	COP09	8-channel relay output, independent NO output.
P311- AI04S	COP11	4-channel analog input module, supporting both current and voltage type signals
P312-AO04S	COP12	4-channel Voltage-type Analog Output Module, supporting both current and voltage type signals
P315- RTD04	COP15	4-channel RTD temperature detection module
P316- TC04	COP16	4-channel Thermocouple Temperature Detection Module

* More types of modules are being added.

1.3 Indicator Light Meaning

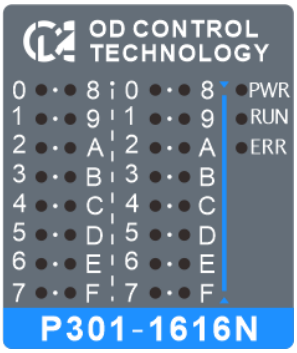

Figure 2 LED indicators

LED	Meaning
PWR	Power indicator light, green. The light turns on after power is connected.
CAN RUN	CAN bus operating status indicator, green. OFF: In initialization state, the device is not started normally. Slow flashing: Lights for 200ms and turns off for 200ms cyclically, in pre-operation state. Fast flashing: Lights for 50ms and turns off for 50ms cyclically, in Stopped state. ON: In operating state.
CAN ERR	Red indicator for CAN bus error status. Off: In initialization state, the device fails to start normally. Slow flashing: Lights for 200ms and extinguishes for 200ms, in pre-operation state. Fast flashing: Lights for 50ms and extinguishes for 50ms, in Stopped state. Steady on: In operating state.
IO LEDs	Used for digital input and output indication, "On" indicates the "active" state, and "Off" indicates the "inactive" state. For other types of signal indications, refer to the instructions of the specific module for the meaning of the indicators.
Analog Channel Status Indicator Light	The analog channel status indicator is used to indicate the status of analog input channels, thermal resistance temperature sampling channels, thermocouple temperature sampling channels, and temperature sensors for thermocouple cold junction temperature compensation. ON: The channel is operating normally. OFF: Channel open circuit, inconsistent sensor type and configuration, or power-on

LED	Meaning
	initialization incomplete. Fast Flashing: Short circuit occurs in the input channel with a flashing frequency of 5Hz. Slow Flashing: The input channel is in calibration state with a flashing frequency of 2Hz. Flashing: Sampled temperature exceeds the upper limit (on for 700ms, off for 100ms); Sampled temperature exceeds the lower limit (on for 100ms, off for 700ms).

1.4 Specification Parameters

1.4.1 Basic Specifications

Applicable Products	P301	P302	P303	P305	P306	P307	P308	P309	P311	P312	P315	P316
Product Name	CAN IO Module											
Size(mm)	（Height x Depth x Width）106 x 85 x 21.5											
Gross Weight	80g	80g	80g	80g	80g	80g	80g	105g	75g	75g	70g	70g
Node ID Range	1~16											
Power Supply	DC24V±20%											
Rated Current(mA)	40	40	35	45	45	35	35	30	20	135	20	25
Transmission Cable	Ethernet/EtherCAT CAT5/5e cable											
Bus Interface	2 x RJ45， ≤1Mbps											
Transmission Distance	≤30m											
Protection Grade	IP20											
Certification	CE											

1.4.2 Environmental Specifications

Applicable Products	P301, P302, P303, P305, P306, P307, P308, P311, P312, P315, P316
Installation/Usage Environment	Environment without conductive dust, conductive fibers, flammable/explosive dust, no flammable gas, corrosive dust or corrosive gas, no water mist, oil contamination, conductive liquid or gas, no severe vibration and repeated impact.
Altitude	≤2000m
Overvoltage Category	CAT I
ESD	Level 3, Contact Discharge: ±6kV， Air Discharge: ±8kV, Criteria A（IEC61000-4-2）
EFT	Signal lines: ±2kV, Power supply lines: ±4kV, Criteria A（IEC61000-4-4）
SURGE	Power：line-to-line:±1kV, line-to-PE: ±2kV, Criteria A（IEC61000-4-5）
Vibration Resistance	1g, EN60068-2-6:2008
Shock Resistance	15g, EN60068-2-27:2009
Operating Temperature and Humidity	Temperature：-20℃~+60℃ Humidity： ＜95%RH（30℃）， no condensation
Storage Temperature and Humidity	Temperature：-20℃~+65℃ Humidity： ＜95%RH（30℃）， no condensation

Transport Temperature and Humidity	Temperature: -40℃~+70℃ Humidity: ＜95%RH（40℃）, no condensation

1.4.3 Digital Input Specifications

Applicable Products	P301	P302	P303	P307	P308
Input Type	Digital Input				
Input method	Source/Sink Type				
Number of Input Channels	16	16	32	24	24
Input Voltage Level	24V DC±20%（19.2VDC ~28.8VDC）				
Input Current	Typical value: 3.8mA @24VDC				
Input ON Voltage	≥15V				
Input OFF Voltage	≤4V				
Hardware Response Time	T_{ON}/T_{OFF}: 100us/100us				
Input Protection	Optocoupler isolation, etc.				
Status Indicator	The indicator light turns on when the input is valid.				

1.4.4 Digital Output Specifications

Applicable Products	P301	P302	P305	P306	P307	P308
Output Type	Low-side output	High-side output	Low-side output	High-side output	Low-side output	High-side output
Output Method	Sink type	Source type	Sink type	Source type	Sink type	Source type
Number of Output Channels	16	16	32	32	8	8
Output Voltage Level	24V DC±20%（19.2VDC ~28.8VDC）					
Output Load	Single channel supports a maximum current output of 1A, and each group with 4 channels supports a maximum output of 1.5A @24VDC.					
Hardware Response Time	TON/TOFF: 100us/100us					
Isolation Method	Optocoupler Isolation					
Output Protection	Supports short-circuit and overcurrent protection for channels. The output of the corresponding channel will be shut off once overcurrent or short-circuit occurs. The output will resume output if the abnormality disappeared.					
Status Indicator	The indicator light turns on when the output is valid.					

When the output drive current is in a high-temperature environment, derating is required. The derating curve is shown in the figure below.

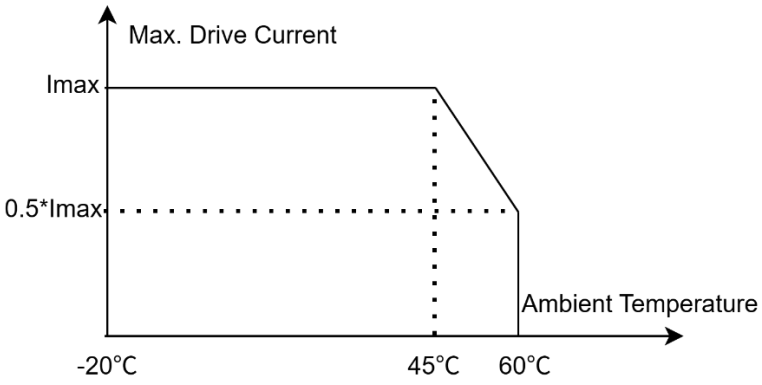

1.4.5 Relay Output Specifications

Applicable Products	P309
Output Type	Digital output, relay output, normally open contact
Output Mode	Dry Contact
Number of output channels	8
Input Voltage Level	30V DC/250V AC
Output Load	Resistive load：2A@250V AC, 2A@30V DC Inductive load：0.7A@250V AC, 0.7A@30V DC Electric lamp load：30W/Channel，200W/Module
Hardware Response Time	T_{ON}/T_{OFF}: about 10ms
Switching Times	100K times (reliable operation times within the above rated working range; exceeding this may cause switch failure or damage)
Isolation Method	Optocoupler Isolation
Output Protection	None
Status Indicator	The indicator light turns on when the output is valid.

When the output drive current is in a high-temperature environment, derating is required. The derating curve is shown in the figure below.

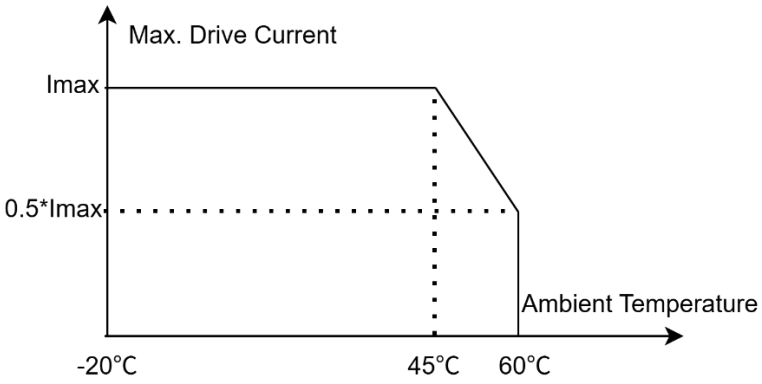

1.4.6 Analog Input Specifications

Applicable Products	P311
Input Type	Analog input
Input Method	Voltage-type / Current-type
Number of Input Channels	4
Resolution	16bits
Convert time	50μs per channel
Input Voltage Range	Optional Settings: ±10V (Default Setting）, 0~10V, ±5V, 0~5V, 1~5V
Input Impedance	>1MΩ
Voltage Sampling Accuracy	±0.1%
Voltage Input Limit	±15V
Voltage Input Diagnosis	When the voltage input range is set to 1~5V, disconnection detection is supported.
Input Current Range	Optional Settings:±20mA, 0~20mA, 4~20mA
Current Sampling Accuracy	±0.1%
Current Sampling Impedance	250Ω
Current Input Limit	±30mA（Instantaneous）
Current Input Diagnosis	Set the current input range to 4~20mA, supporting open-circuit detection.
Input Protection	No isolation between interface channels, while isolation is provided between interfaces, power supply and communication components.
Status Indicator	The LED light turns off when the connection is disconnected.

Relationship Table of Analog Input Signal Types and Sampling Feedback Data:

Signal Type	Input Signal Range	Rated feedback value range	Sampling limit range	Limit feedback value range
Voltage-type	-10V ~ +10V	-32000 ~ +32000	-10.20V ~ +10.20V	-32640 ~ +32640
	0V ~ +10V	0 ~ +32000	-0.20V ~ +10.20V	-640 ~ +32640
	-5V ~ +5V	-32000 ~ +32000	-5.10V ~ +5.10V	-32640 ~ +32640
	0V ~ +5V	0 ~ +32000	-0.10V ~ +5.10V	-640 ~ +32640
	1V ~ +5V	0 ~ +32000	0.8V ~ +5.08V	-1600 ~ +32640
Current-mode	4mA~+20mA	0 ~ +32000	3.2mA~+20.32mA	-1600 ~ +32640
	0mA~+20mA	0 ~ +32000	-0.4mA~+20.40mA	-640 ~ +32640
	-20mA~+20mA	-32000 ~ +32000	-20.40mA~+20.40mA	-32640 ~ +32640

1.4.7 Analog Output Specifications

Applicable Products	P312
Output Type	Analog Output
Output Mode	Voltage-type / Current-type

Number of output channels	4
Resolution	16bits
Convert Time	50μs/Channel
Output Voltage Range	Optional Settings：±10V（Default Settings）, 0~10V, ±5V, 0~5V, 1~5V
Output Impedance	1kΩ
Voltage Output Accuracy	±0.1%
Voltage Output Limit	±15V
Output Current Range	Optional settings: 0~20mA, 4~20mA
Current Output Accuracy	±0.1%
Current Output Load	0~600Ω
Output Protection	No isolation between interface channels, while isolation is implemented between interfaces and the power supply as well as communication parts.
Status Indicator	It will be OFF if the connection is disconnected or go out of Operational state.

Relationship Table of Analog Output Signal Types and Output Digital Quantity Data:

Signal Type	Input Signal Range	Rated feedback value range
Voltage-type	-10V ~ +10V	-32000 ~ +32000
	0V ~ +10V	0 ~ +32000
	-5V ~ +5V	-32000 ~ +32000
	0V ~ +5V	0 ~ +32000
	1V ~ +5V	0 ~ +32000
Current-mode	0mA~+20mA	0 ~ +32000
	4mA~+20mA	0 ~ +32000

1.4.8 Specifications of RTD Module

Applicable Products	P315
Input Type	Thermal Resistance Input Temperature Detection
Number of Input Channels	4-channel RTD input
Signal Sampling Resolution	24 bits
Display Numerical Sensitivity	0.1℃, 16bit integer temperature data
Sensor Type	PT100, PT500, PT1000, Cu100, KTY84
Wiring Mode	Two-wire/Three-wire Thermal Resistance Sensor
Precision（25℃）	AD sampling accuracy of ±0.1%, refer to the table below for the corresponding temperature accuracy.
Accuracy (Full Operating Temperature Range)	AD sampling accuracy of ±0.2%, and the corresponding temperature accuracy is shown in the table below.
Sampling Period	Software configurable: 250ms, 500ms, 1000ms / 4 channels
Filtering Level	Software configurable: 0~9, default:2

Input Diagnosis	Supports over-limit and disconnection detection
Over-limit Setting	Supports over-limit setting and over-limit detection enable, disabled by default
Temperature Offset Setting	The default offset is 0℃, and the offset setting range is: -500.0℃ ~ +500℃.
Isolation and Protection	No isolation between interface channels, while interfaces are isolated from power supply and communication parts.
Status Indicator	Keeps ON during normal operation. Turns off when disconnected, flashes rapidly at 5Hz in case of short circuit, flashes continuously long when exceeding the upper limit, and flashes briefly when dropping below the lower limit.

Reference Table of Sensor Temperature Detection Range and Accuracy:

Sensor Type	Temperature Detection Range	Precision
PT100	-200.0℃ ~ 850.0℃	±1.0℃@ T< 300.0℃ ±2.0℃@ 300.0℃≤T≤700.0℃ ±2.5℃@ T>700.0℃
PT500	-200.0℃ ~ 850.0℃	±1.0℃@ T< 300.0℃ ±2.0℃@ 300.0℃≤T≤700.0℃ ±2.5℃@ T>700.0℃
PT1000	-200.0℃ ~ 850.0℃	±1.0℃@ T< 300.0℃ ±2.0℃@ 300℃≤T≤700.0℃ ±2.5℃@ T>700.0℃
Cu100	-50.0℃ ~ 150.0℃	±1.0℃@ -50.0℃≤T≤150.0℃
KTY84	0℃ ~ 200.0℃	±1.5℃@ 0.0℃≤T≤200.0℃

1.4.9 Specifications of Thermocouple Module

Applicable Products	P316
Input Type	Thermocouple Temperature Detection
Number of input channels	4-channel thermocouple input
Signal Sampling Resolution	24bits
Display Numerical Sensitivity	0.1℃, 16bit integer temperature data
Thermocouple Type	K（Default）, B, E, N, J, R, S, T
Compensation Method	The thermal resistance temperature detection realizes cold junction compensation, shared by 4 channels. In case of an open circuit, temperature compensation is performed based on the temperature at the circuit board wiring terminals.。
Precision（25℃）	AD sampling accuracy of ±0.1%, and the corresponding temperature accuracy is shown in the table below.
Accuracy (Full Operating Temperature Range)	±0.2% AD sampling accuracy, the corresponding temperature accuracy is shown in the table below.
Sampling Period	Software configurable: 250ms, 500ms, 1000ms / 4 channels
Filtering Level	Software configurable: 0~9, default:2
Input Diagnosis	Supports over-limit and disconnection detection. Upon disconnection, detection is performed at fixed intervals (5s), and the connection can be restored.

Overlimit Setting	Supports over-limit value configuration and over-limit detection enable, disabled by default。
Temperature Offset Setting	Default offset is 0℃, offset setting range: -500.0℃~+500℃.
Isolation protection	No isolation between interface channels; isolation exists between the interface and the power supply and communication sections.
Status Indication	Keeps ON during normal operation. Turns off when disconnected, flashes rapidly at 5Hz in case of short circuit, flashes continuously long when exceeding the upper limit, and flashes briefly when dropping below the lower limit.

The detection range of the thermocouple and the sampling accuracy of the ADC are shown in the table below.

Sensor Type	Temperature Detection Range	Precision
K	-270.0℃ ~ 1370.0℃	±1.5℃@ -270.0℃≤T< -100.0℃ ±1.0℃@ -100.0℃≤T≤500.0℃ ±1.5℃@ 500.0℃≤T≤1000.0℃ ±2.5℃@ 1000℃≤T≤1200.0℃ ±3.0℃@ 1200℃≤T≤1370.0℃
J	-210.0℃ ~ 1200.0℃	±2.0℃@ -210.0℃≤T< -100.0℃ ±1.0℃@ -100.0℃≤T≤500.0℃ ±2.5℃@ 500.0℃≤T≤1200.0℃
B	200.0℃ ~ 1800.0℃	±6.0℃@ 200.0℃≤T< 400.0℃ ±5.0℃@ 400.0℃≤T≤750.0℃ ±3.0℃@ 750.0℃≤T≤1200.0℃ ±3.5℃@ 1200℃≤T≤1800.0℃
E	-270.0℃ ~ 1000.0℃	±2.0℃@ -270.0℃≤T< -200.0℃ ±1.0℃@ -200.0℃≤T≤400.0℃ ±1.5℃@ 400.0℃≤T≤1000.0℃
N	-200.0℃ ~ 1300.0℃	±2.0℃@ -200.0℃≤T< -150.0℃ ±1.5℃@ -150.0℃≤T≤750.0℃ ±2.5℃@ 750.0℃≤T≤1300.0℃
R	-50.0℃ ~ 1765.0℃	±5.0℃@ -50.0℃≤T< 0.0℃ ±4.0℃@ -0.0℃≤T≤250.0℃ ±2.0℃@ 250.0℃≤T≤500.0℃ ±4.0℃@ 500℃≤T≤1300.0℃ ±5.0℃@ 1300℃≤T≤1370.0℃
S	-50.0℃ ~ 1765.0℃	±5.0℃@ -50.0℃≤T< 0.0℃ ±4.0℃@ 0.0℃≤T≤250.0℃ ±2.0℃@ 250.0℃≤T≤500.0℃ ±3.5℃@ 500.0℃≤T≤1700.0℃ ±5.0℃@ 1700.0℃≤T≤1765.0℃
T	-270.0℃ ~ 400.0℃	±2.0℃@ -270.0℃≤T< -200.0℃ ±1.0℃@ -200.0℃≤T≤400.0℃

Supports automatic recovery to normal operation when the thermocouple is reconnected after

disconnection.

Cold junction compensation for thermocouples uses one three-wire RTD to detect the cold junction temperature, shared by 4 channels. If separate cold junction compensation is required for the 4 channels, an RTD module can be used to detect the thermocouple induced potential Er corresponding to the cold junction temperature of each thermocouple, read the induced potential E measured by the thermocouple module, so as to obtain the total potential Ee of the thermocouple channel, and derive the measured temperature of the thermocouple based on Ee.

$$Ee = E + Er$$

After obtaining the potential Ee compensated for cold junction temperature, the measured temperature value Te is derived based on the potential, sensor type, and sensor characteristics.

$$Te = f(Ee)$$

The thermocouple circuit on the thermocouple module for cold junction compensation features a wire break detection function. When a wire break is detected, the cold junction compensation temperature uses the temperature at the thermocouple connection terminal, which is measured internally by the thermocouple module. The cold junction temperature detected by the thermocouple is also periodically sent to the master device along with the PDO. The accuracy of the cold junction compensation temperature is 0.01°C.

1.5 Typical Application

The COP series products can be connected to controllers/PLCs that support the CANopen master station, enabling the expansion of remote modules and facilitating flexible configuration of hardware interface resources. They can also serve as CAN bus interface expansion modules for the ECP series EtherCAT slave modules, achieving the expansion of different interface resources for a single EtherCAT slave station.

Users can flexibly select the expansion method based on the communication interface supported by the controller in use. Its typical application topology is shown in the figure.

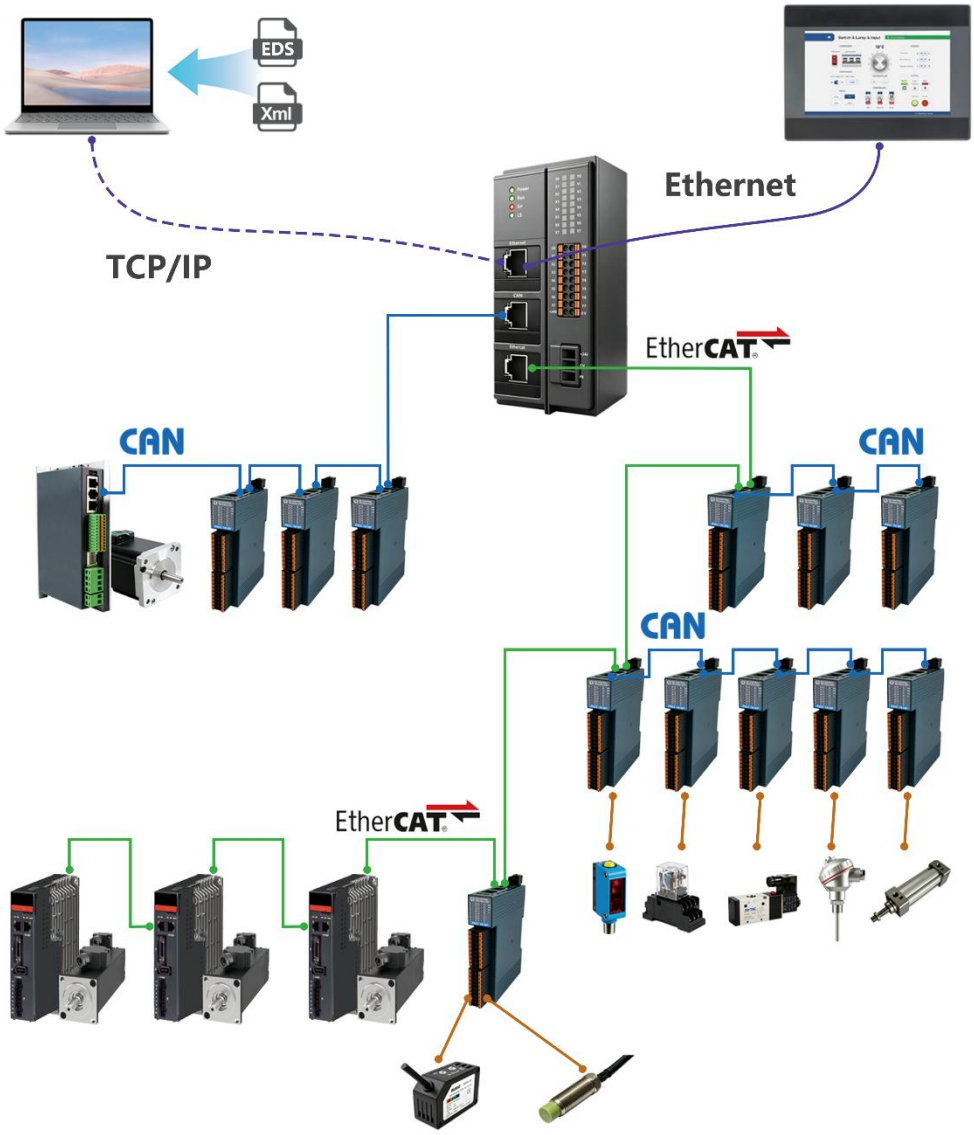

Figure 3 Typical Application Topology

When ECP series modules connect to an EtherCAT master station (usually a PLC), they can not only be used independently as standalone EtherCAT IO slave devices, but also expand ECP or other EtherCAT slave devices via the EtherCAT OUT interface. Additionally, the CAN interface of ECP modules can be used to expand COP modules, enabling ECP devices to achieve more abundant and flexible IO configuration. The internal terminal resistance of the CAN network is enabled by default for the CAN interface of ECP devices. The RUN and ERR indicator lights of the CAN interface reflect the network status of the expanded COP module.

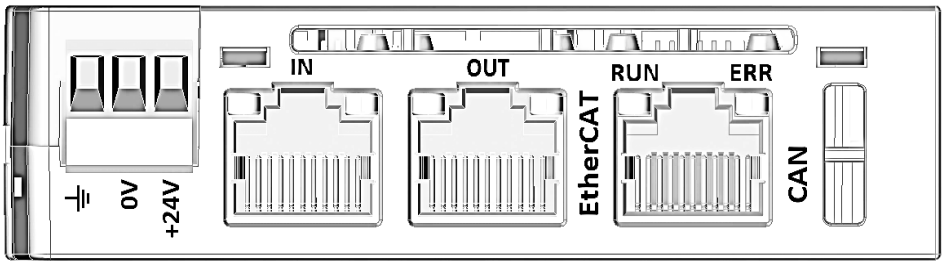

Figure 4 Top signal interface of the ECP module

When expanding with COP series modules, it is required to set the node ID, baud rate Bd and termination resistor R via the DIP switch on the top of the module. Setting principles:

- The baud rate Bd must be set to be consistent with the CAN baud rate of the CAN master. The CAN baud rate of ECP series modules is 1 Mbps, so both DIP switches for the baud rate setting of the connected COP module shall be set to OFF.
- Within the same CAN network, the ID must be set to a unique value without duplication. The smaller the ID, the higher the priority during data communication.
- When the module is located at the terminal of the CAN network, set the termination resistor to ON (for Bus network connection, the other termination resistor is usually enabled in the CAN master).

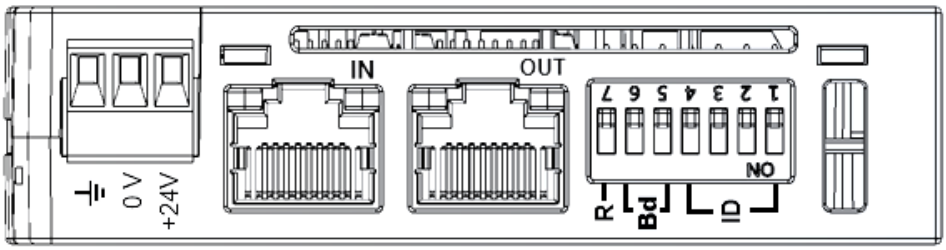

Figure 5 Top signal interface of the COP module

1.5.1 Node Address Setting

The node ID of COP series I/O devices can be set via the DIP switches on the device. BIT0 to BIT3 of the DIP switches are used to set the node ID, and the set ID = 0bBIT3~BIT0 + 1 (e.g., if only BIT1 is set to ON, the ID value is 3). After setting the ID, the device needs to be powered off and on again for the settings to take effect. The correspondence between DIP switch settings and node IDs is shown in the following table:

BIT0	BIT1	BIT2	BIT3	Nod ID
0	0	0	0	1
1	0	0	0	2
0	1	0	0	3
1	1	0	0	4
0	0	1	0	5
1	0	1	0	6
0	1	1	0	7
1	1	1	0	8
0	0	0	1	9
1	0	0	1	10
0	1	0	1	11
1	1	0	1	12
0	0	1	1	13
1	0	1	1	14
0	1	1	1	15
1	1	1	1	16

1.5.2 Baud Rate Setting

Bits 4 and 5 of the DIP switch are for baud rate setting. Table of DIP switch settings and corresponding baud rates:

BIT5	BIT4	Baud rate
OFF	OFF	1Mbps
OFF	ON	500kbps
ON	OFF	250kbps
ON	ON	125kbps

1.5.3 Termination Resistor Configuration

The COP series modules have a built-in 120Ω termination resistor. Users can enable or disable the termination resistor connection via a DIP switch. Specifically, BIT7 of the DIP switch controls the connection/disconnection of the termination resistor.

In a CAN network, only the two CAN devices at the farthest ends (which can be masters or slaves) are allowed to be connected with termination resistors. An excessive or insufficient number of connected termination resistors may lead to unstable communication.

2 Mechanical Installation

For COP series products, attention shall be paid to the environmental and protection requirements of the modules during installation. It is recommended that:

- It is recommended to install the module in an electrical cabinet with protection against dust, moisture and pollution
- Ensure good ventilation inside the electrical cabinet
- Choose an installation location away from overheating equipment
- Install the module vertically and keep the surrounding air circulating (with a clearance of more than 10mm around)
- After installing the module, install rail fixings at both ends to secure it firmly
- Cut off the power supply before installing or disassembling the module.

To meet the requirements of equipment ventilation, heat dissipation and reserved wiring space, a certain gap shall be reserved during product installation to facilitate the installation, operation and disassembly of the equipment. Taking the installation of equipment on horizontal guide rails as an example, refer to the figure below.

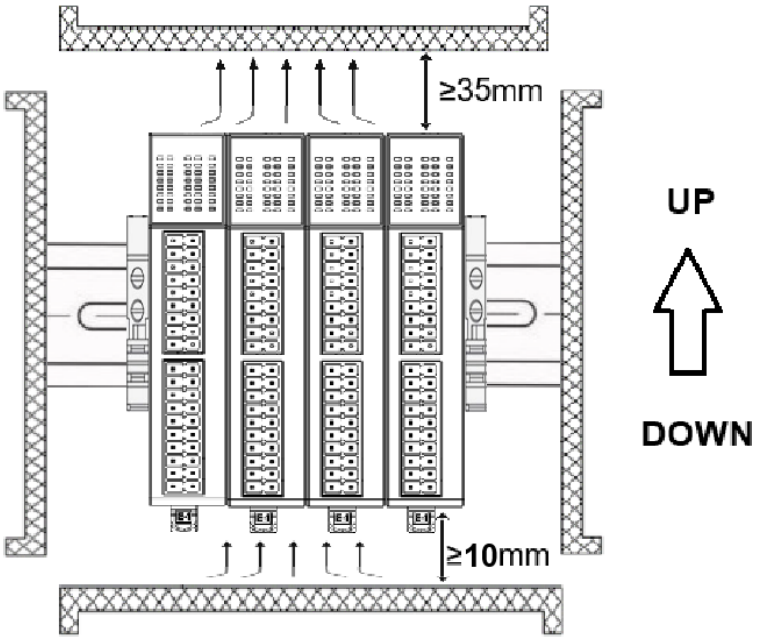

Figure 6 Requirements for installation gaps between the module and its surroundings

The COP series modules adopt DIN rail mounting. The DIN rail must comply with the EN60715 standard (width: 35 mm, thickness: 1 mm). The dimensional information of the DIN rail is shown in the figure below.

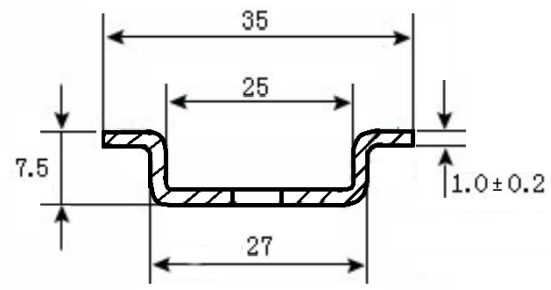

Figure 7 DIN rail dimension information

To ensure the equipment is securely mounted on the DIN rail, it is recommended to add rail fasteners.

2.1 Installation Dimensions

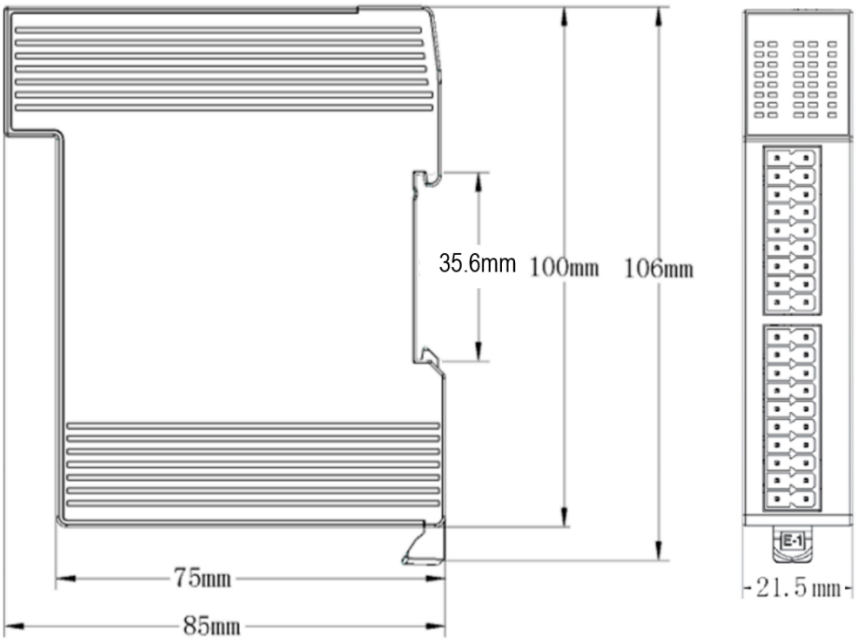

Figure 8 COP Product Installation Dimension Diagram

Sufficient space shall be reserved above the product according to the selected network cable plug. A 10mm space shall be reserved below the product to accommodate the travel of the DIN rail latch when it opens.

2.2 Installation Method

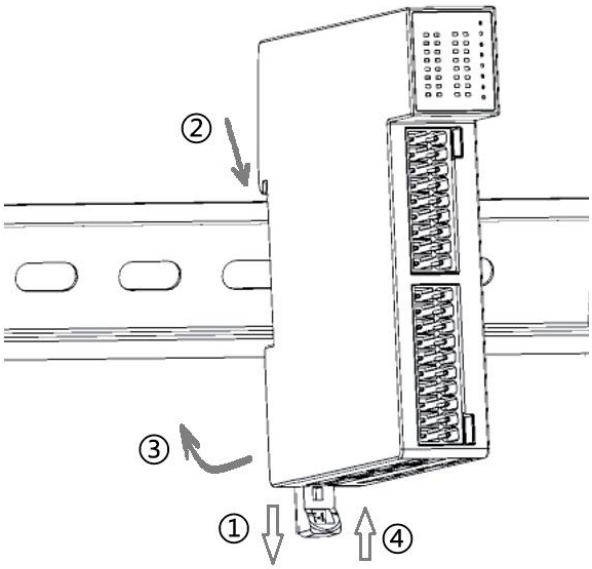

Figure 9 Installation Method

The module installation process is shown in the following steps:

▪ Step ①: Pull out the buckle at the lower end of the module to retract it into the housing and keep it in an open state.

▪ Step ②: Clip the upper end of the module onto the DIN rail.

▪ Step ③: Rotate the module to make the movable buckle end fit closely against the rail.

▪ Step ④: Press the lower rail buckle to lock the movable buckle onto the rail.

A click sound will be heard when pulling or pressing the rail buckle, indicating it has entered the locked/open state.

Do not pull or press the rail buckle with excessive force.

2.3 Disassembly Method

The procedure for removing the module from the DIN rail is the reverse of the installation procedure. The removal steps are as follows:

- Step ①: Lift the DIN rail buckle to release it from the DIN rail.
- Step ②, ③: Rotate the module upward with the fixed buckle end as the fulcrum, and move the fixed end upward to disengage the module from the top of the DIN rail, completing the removal.

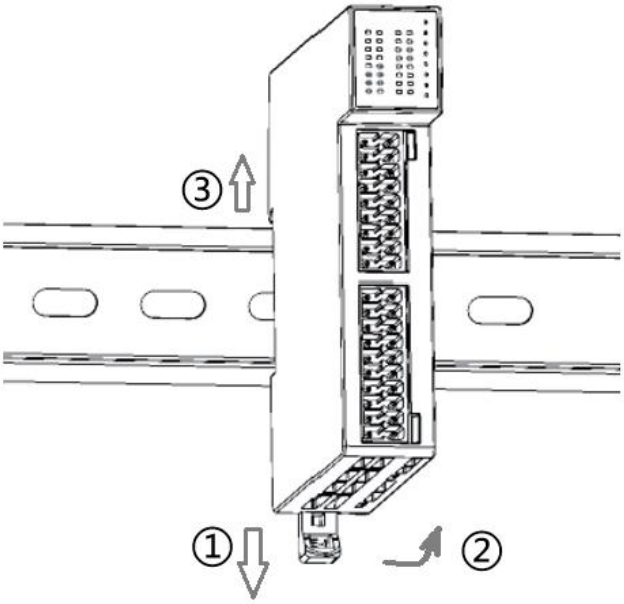

Figure 10 Disassembly of the module

If the installation space at the lower end of the module does not allow the buckle to be pulled open by hand, use a screwdriver to pry it open.

Do not pull or press the module forcibly during disassembly.

3 Electrical Installation

3.1 Wiring Precautions

EMC (Electromagnetic Compatibility) issues fall into the category of system-level problems. Even if a product is designed to meet the operating conditions for harsh environments, reasonable external wiring and routing still need to be considered in practical use to reduce interference between devices.

Pay attention to the following matters during the electrical connection of the system:

- Please adopt the recommended cable specifications. Shielded cables are recommended for extended cables to enhance anti-interference capability.
- When connecting communication cables to network ports, insert the cables firmly into the network ports until they lock into place. Secure the cables to avoid excessive stress at the network port connections.
- Route communication cables and signal wires separately from power cables (high voltage, high current) and other cables transmitting strong interference signals, and avoid parallel routing.
- For electrical wiring, keep away from harsh environments such as high temperature, high humidity, dust, oil contamination and corrosive conditions.
- When wiring near equipment generating severe noise or interference, take measures to mitigate the impact of noise sources, such as placing the equipment or lines inside a metal enclosure.
- When both system power supply and IO power supply are required simultaneously, pay attention to their mutual interference. It is recommended to adopt measures such as using independent power supplies, adding isolation transformers or filters.
- When using shielded cables, keep the unshielded section as short as possible, and connect the shielding mesh to the nearest PE terminal.
- Grounding measures shall comply with relevant electrical codes of respective countries or regions. The grounding terminal must be reliably grounded, and shall not be shared with the power neutral N terminal.

3.2 Cable Selection

The selection of IO cables is limited by the signal current passing through the IO terminals. The table below lists supported cables. Users shall reasonably select the wire gauge and cable type according to actual application conditions and signal current requirements.

Applicable wire diameter		Recommended Stripping Length (Unit: mm)	Recommended models of tubular pin-type crimp terminals
GB Standard/mm^2	American Standard/AWG		
0.3	22	8/10	E0308/E0310
0.5	20	10	E0510

0.75	18	10	E7510
1.0	18	10	E1010
1.5	16	10	E1510

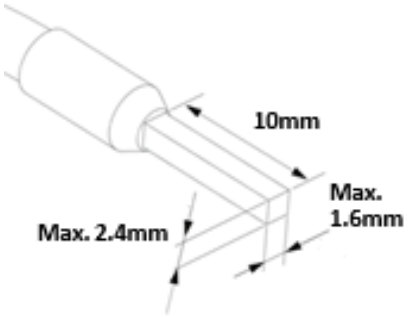

Figure 11 Stripping Requirements for Module Wiring

For terminals with high-current output such as DO output signals, it is necessary to select cables with an appropriate diameter based on the actual maximum operating current when choosing cables.

The CAN communication cable adopts standard RJ45 network interfaces and standard crystal connectors. Please use CAT5e or higher shielded twisted pair cables. The cable specifications are shown in the table below:

Parameter Item	Specification Description
Cable Type	CAT5/CAT5e cable(100BASE-TX)
Shielding Circuit Requirements	Double-layer shielding (SFTP or SFTPP), textile mesh shielding coverage rate 85%, aluminum foil layer coverage rate 100%
Meet the standards	EIA/TIA568B, EN50173-3, ISO/IEC11801
Working Environment Requirements	Operating Temperature:-30℃~60℃ Determine the requirements for corrosion resistance and fatigue resistance based on the working environment.
Conductor cross-section	AWG26 or above

3.3 Interface Signal Identification

The interface signal definitions of the COP series products adopt unified names. Any discrepancies will be specified in the respective product documentation.

Please refer to the table below for the signal identifiers and their corresponding meanings of the products:

Interfaces	Signal Marking	Signal Meaning
Power supply	+24V	Connect to the +24V power supply provided by the switching power supply.
	0V	Connect the +24V power supply of the switching power supply to the corresponding COM port or 0V interface.
	PE/⏚	Protective Earthing
CAN	CAN	CAN communication interface adopts RJ45 interface, and the pin signal definition is as follows: 1: CAN_H 2: CAN_L

Interfaces	Signal Marking	Signal Meaning
		3: GND Metal Shell: PE
DI	DI_x	Digital input signal x, the number of DI ports of the device shall not exceed 16.
	DI_xx	Digital input signal xx, the number of DI channels of the device exceeds 16.
	24V	Connect to the +24V power supply provided by the switching power supply.
	COM/0V	Connect the +24V switching power supply to the corresponding COM port or 0V interface.
	COMx	"x" is a digit ranging from 0 to 9, representing the common terminal of signals. Different values of x indicate that the common terminals are independent of one another, meaning there are multiple separate signal common terminals with no interconnection. For instance, by adopting different wiring methods of the common terminals on the digital input module, the same device can realize signal acquisition of both NPN (sink type) and PNP (source type).
DO	DO_x	Digital output signal x, the number of DO ports of the device shall not exceed 16.
	DO_xx	Digital output signal xx, the number of DOs of the device exceeds 16.
	24V	Connect to the +24V power supply provided by the switching power supply.
	COM	Connect the +24V power supply of the switching power supply to the corresponding COM port or 0V interface.
AI	VIx+	Access point for positive terminal of voltage-type or current-type signals
	VIx-	Access point for the negative terminal of voltage-type or current-type signals
	Ix+	Access Point for Positive Terminal of Current-Type Signal
	Ix-	Access Point for Negative Terminal of Current-type Signal
	PE	Protective Earthing
AO	Vx+	Positive terminal of voltage-type output signal
	Ix+	Positive terminal of current-type output signal
	VIx-	Negative terminal of voltage-type or current-type signal
	PE	Protective Earthing
	+24V	Connect to the +24V power supply provided by the switching power supply.
	COM	Connect the +24V switching power supply to the corresponding COM port or 0V interface.
RTD/NTC	Rx+	Wiring for 3-wire/2-wire thermal resistance and NTC thermistor connection lines
	Rx-	Common wire for connecting three-wire/two-wire thermal resistors and NTC thermistors
	Lx	When using compensation wires for connecting three-wire thermal resistors, two-wire thermal resistors, or NTC thermistors, short-circuit them with Rx-.
	PE	Protective Earthing
	NC	Not connected
TC	Lx+	Connect the positive pole of the thermocouple
	Lx-	Connect the negative pole of the thermocouple
	R+	Working wires for connecting three-wire/two-wire thermal resistors

Interfaces	Signal Marking	Signal Meaning
	R-	Common wire for connecting three-wire/two-wire thermal resistance
	RL	Compensation wires for connecting three-wire thermal resistors shall be short-circuited with R- when using two-wire thermal resistors.
	PE	Protective Earthing

* The "x" in the signal name is a one-digit hexadecimal value ranging from 0 to F, which is generally used to indicate the sequence of signals.

* "xx" in the signal name represents a two-digit hexadecimal value ranging from 00 to FF, which is usually used to indicate the sequence of signals.

3.4 Terminal Wiring

When wiring the device, users shall refer to the device manual and complete signal connection according to the product signal markings as well as the wiring methods for various signals described in this section. Do not wire randomly to avoid improper use, which may cause device damage or resulting losses.

3.4.1 Digital Input

Modules with digital input interfaces adopt bidirectional optocouplers for internal isolation. If equipped with 16 input ports, there are two common terminals marked as COMx, where x represents different numbers to distinguish each common terminal. This allows users to connect different common terminals and access two sets of input signals of different types (NPN and PNP). For modules with more digital input interfaces, additional common terminals can be provided (typically one common terminal is shared by 8 DI input interfaces). Users can access different types of input signals according to application requirements. The wiring diagram is shown as follows:

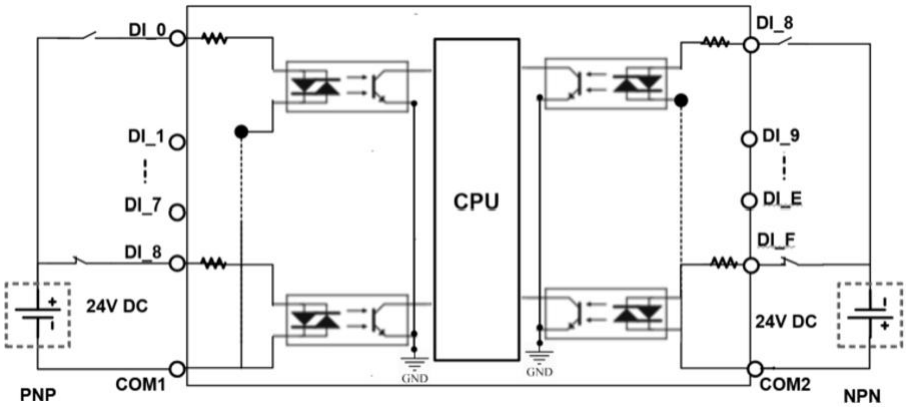

Figure 12 Wiring for NPN/PNP compatible input

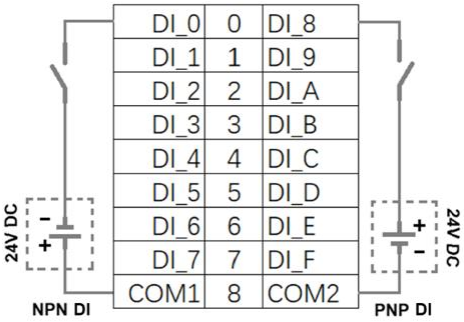

Figure 13 Wiring and Signal Definition of Digital Input Terminals

3.4.2 Digital Output

For NPN (sink type) output signals, a 2×10 terminal interface is adopted, providing two sets of power signal wiring ports. The 24V terminals of the two power supplies are connected together, and the 0V terminals are also connected together, which enables a more stable power circuit and higher current support. The wiring is shown in the figure:

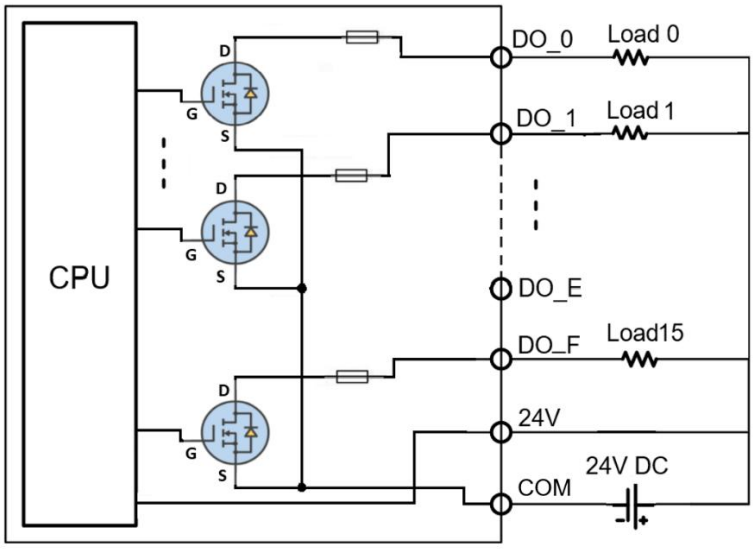

Figure 14 Wiring of NPN type (sink type) output

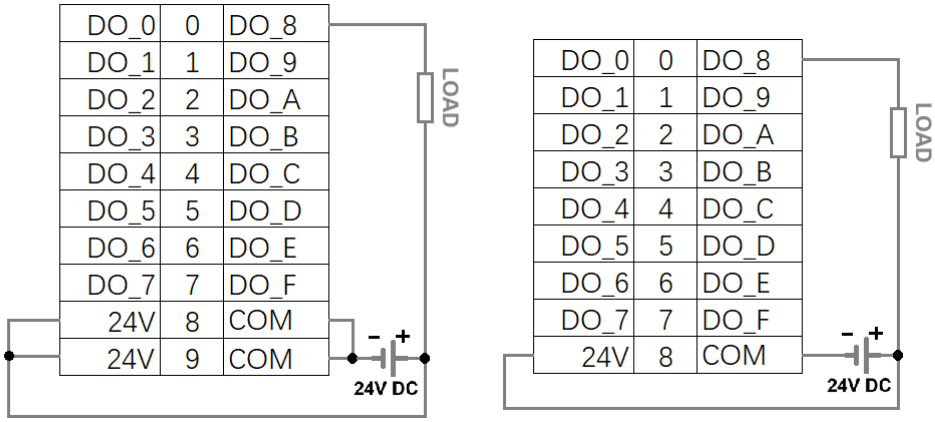

Figure 15 Wiring and Signal Definition of 20PIN and 18PIN NPN Output Terminals

The wiring of PNP-type (sourcing) digital output signals is shown in the figure below.

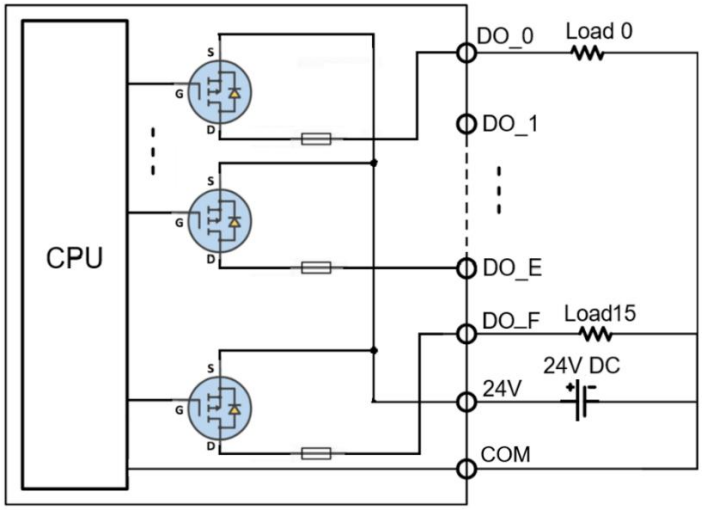

Figure 16 Wiring of PNP (sourcing) output

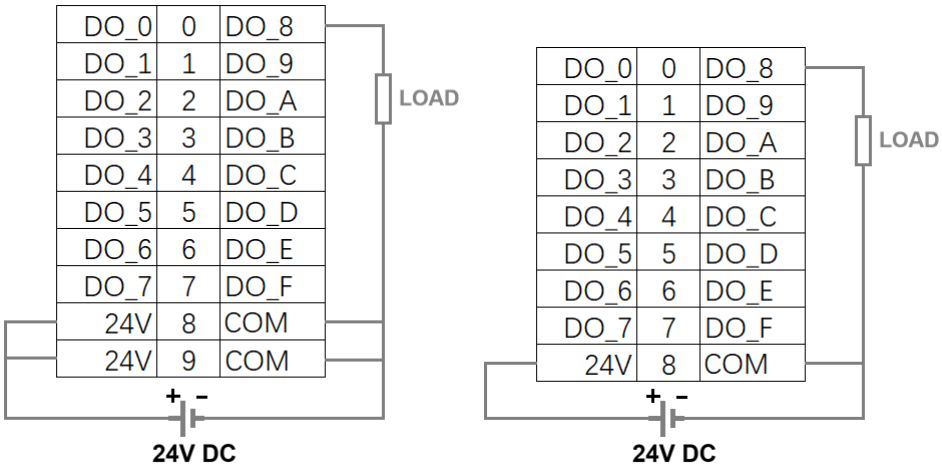

Figure 17 Wiring and Signal Definition of 20PIN 18PIN PNP Output Terminals

3.4.3 Relay Output

The relay output module uses single-pole single-throw normally open contact relays to control the disconnection and closure of digital output ports. When an output port is active, the relay closes, and the output terminal functions as a dry contact. The power supply for each group of relays can be independently selected as DC or AC. When a DC power supply is chosen, the common terminal can be connected to either positive or negative polarity, and the specific configuration shall be selected according to application requirements.

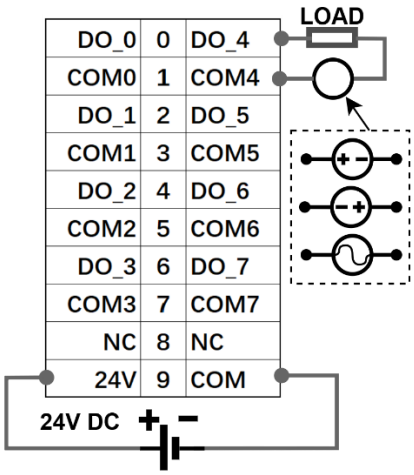

Figure 18 Relay Output Wiring Diagram

3.4.4 Analog Input

Analog input acquisition modules usually support the input of voltage-type and current-type signals. During use, it is necessary to confirm whether the input signal exceeds the signal acquisition range of the module. Do not connect out-of-range signals to the module; if the limit that the module can withstand is exceeded, the module may be damaged.

Taking a four-channel analog input module as an example, its wiring is shown in the figure below.

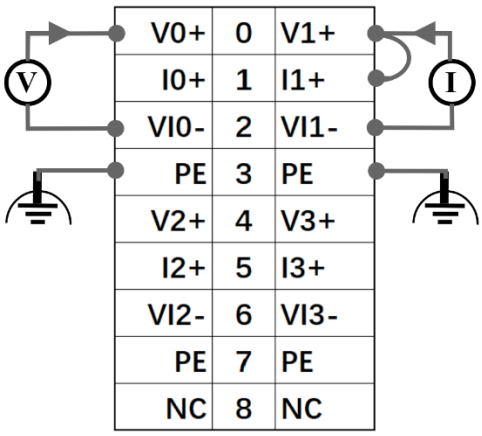

Figure 19 Analog Input Signal Wiring Diagram

The connected voltage or current signal must fall within the measurable voltage or current range of the

module; otherwise, the module may be damaged.

To ensure signal stability and avoid the impact of interference, use shielded, low-impedance cables for signal transmission and reliably ground the cables.

3.4.5 Analog Output

Analog output modules usually support the output of voltage-type and current-type signals. Taking the four-channel analog input module as an example, its wiring is shown in the figure below.

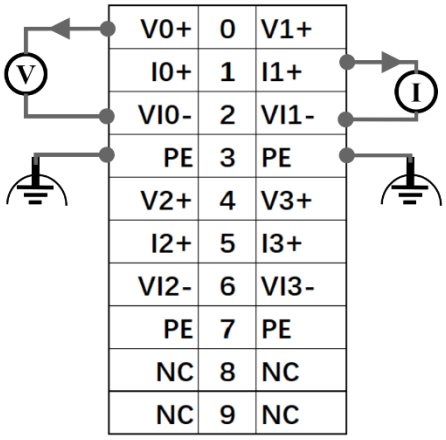

Figure 20 Analog Output Signal Wiring Diagram

All four channels are capable of both current output and voltage output functions. Users shall use either the voltage output terminal or the current output terminal according to the operating mode of the channel, and the two shall not be mixed; otherwise, inaccurate output signals may occur. It is also prohibited to connect both current output and voltage output to one single channel simultaneously, as this may cause channel damage.

For signal stability and to avoid interference, use shielded, low-impedance cables for signal transmission and ensure the cables are properly grounded.

3.4.6 RTD Temperature Sampling

Thermal resistance temperature sampling module supports access to three-wire and two-wire thermal resistances. Users shall confirm whether the module is compatible with the thermal resistance sensor in use before connection.

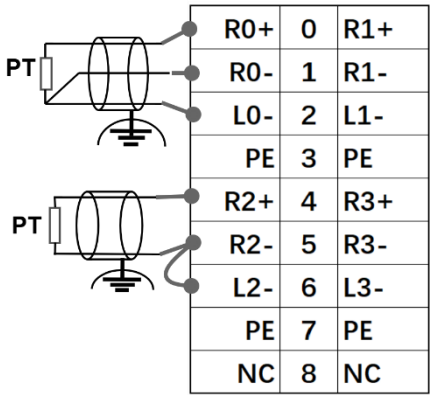

Figure 21 Wiring Diagram of Thermal Resistance Input Signal

Considering signal stability and avoiding the impact of interference, please use shielded and low-impedance cables for signal transmission and ensure reliable grounding of the cables. Before the thermal resistance module operates, confirm that the sensor type parameters configured for the module are consistent with the type of sensor in use.

3.4.7 Thermocouple Temperature Sampling

Thermocouple temperature sampling module can only obtain accurate detected temperature after cold junction compensation. Users can adopt a PT100 thermal resistor to measure and compensate the cold junction temperature. If no PT100 thermal resistor is connected for cold junction temperature measurement, the module will detect an open circuit of the thermal resistor, and it will use the built-in temperature sensor to detect the temperature of the terminal connection end for cold junction junction temperature compensation.

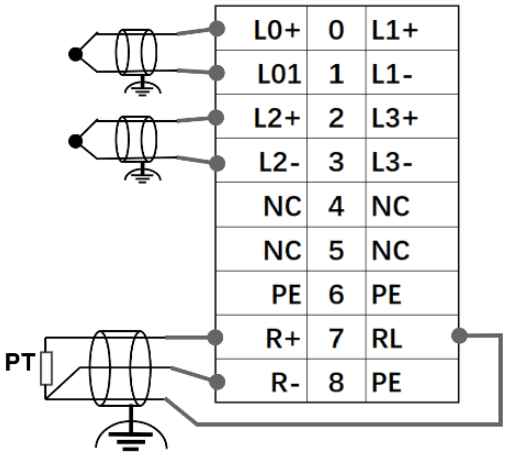

Figure 22 Wiring Diagram of Thermocouple Input Signal

When using a thermistor sensor as the cold junction temperature compensation sensor for wiring, connect the thermistor to R+ and R-, and short-circuit R- to RL. For signal stability and to avoid the impact of interference, use shielded, low-impedance cables for signal transmission and ensure the cables are reliably grounded.

Before the thermocouple module operates, confirm that the sensor type parameters configured on the

module match the type of sensor in use.

4 COP Series Modules Configuration Parameters

The meanings and configuration contents of the configuration parameters for the COP series modules are the same as those of the ECP series modules. The difference lies in that when a CAN bus master device directly performs data interaction with COP series modules, the indexes and sub-indexes of the object dictionary used are different. For the definition of the device object dictionary, please refer to the CANopen Object Dictionary chapter in the appendix.

4.1 Digital Input Configuration Parameters

4.1.1 Digital Input Polarity

The signals sampled at the input port can have their sampled high level/low level fed back as 0/1 by configuring the signal polarity object. The default polarity setting is 0 (no polarity inversion; high level feeds back as 1 and low level feeds back as 0).

Object	Data Type	Read/Write	Description
0x6102:01	Unsigned16	RW	Objects for 16-channel digital input module
0x6322:01	Unsigned32	RW	Objects for 32-channel digital input module
0x6002:01	Unsigned8	RW	Objects for 24-channel digital input module, corresponding to the input signals of DI0~7
0x6002:02	Unsigned8	RW	Objects for 24-channel digital input module, corresponding to the input signals of DI8~F
0x6002:03	Unsigned8	RW	Objects for 24-channel digital input module, corresponding to the input signals of DI10~17

Set the bit value of the polarity object dictionary to configure whether the corresponding input port signal is inverted. When set to 1, the signal is inverted; when set to 0, the signal remains non-inverted.

4.1.2 Digital Input Filtering

To prevent the acquisition of transient digital input signal pulses, configure the filter object to ignore pulse signals within 7ms. When a bit in the filter setting object dictionary is set to 1, the corresponding input signal pulse can only be sampled and fed back if its duration exceeds 7ms. When the bit is set to 0, input signal pulses lasting more than 3ms will be sampled and fed back.

Object	Data Type	Read/Write	Description
0x6103:01	Unsigned16	RW	Objects for 16-Channel digital input module
0x6123:01	Unsigned32	RW	Objects for the 32-channel digital input module
0x6003:01	Unsigned8	RW	Objects for 24-channel digital input module, corresponding to the input signals of DI0~7
0x6003:02	Unsigned8	RW	Objects for 24-channel digital input module, corresponding to the input signals from DI8 to DF
0x6003:03	Unsigned8	RW	Objects for 24-channel digital input module, corresponding to the input signals of DI10~17

4.2 Digital Output Configuration Parameters

4.2.1 Digital Output Polarity

Digital output polarity allows switching the conduction/blocking state corresponding to output value 1/0 to blocking/conduction. The inversion of output polarity for each corresponding channel can be set via the bits in the digital output polarity object dictionary.

Object	Data Type	Read/Write	Description
0x6302:01	Unsigned16	RW	Objects for 16-channel digital output module
0x6322:01	Unsigned32	RW	Objects for 32-channel digital output module
0x6202:01	Unsigned8	RW	Objects for 8-channel digital output module

4.2.2 Output Mode When Digital Output Is Abnormal

Output mode for abnormal digital output, used to configure how the output ports send signals when the module malfunctions or exits the Operational state. The setting object for the abnormal output mode of digital outputs is 0x6?06, and the default bit value is 1, which means adopting the values defined in the abnormal output value object dictionary. When the bit is set to 0, the corresponding output channel maintains its output state upon abnormality or exit from the OP state.

Object	Data Type	Read/Write	Description
0x6306:01	Unsigned16	RW	Objects for 16-channel digital output module
0x6326:01	Unsigned32	RW	Objects for 32-channel digital output module
0x6206:01	Unsigned8	RW	Objects for 8-channel digital output module

4.2.3 Output Value When Digital Output Is Abnormal

When the digital output is abnormal, the output value object dictionary defines the output value of the output port in case of abnormality or OP exit (the corresponding bit of the output mode upon abnormality needs to be set to 1).

Object	Data Type	Read/Write	Description
0x6307:01	Unsigned16	RW	Objects for 16-channel digital output module
0x6327:01	Unsigned32	RW	Objects for 32-channel digital output module
0x6207:01	Unsigned8	RW	Objects for 8-channel digital output module

4.2.4 Digital Output Port Shielding

Mask object dictionary for digital output ports. It can mask corresponding ports to shield the user-configured output values. The default bit value is 1, indicating that user settings for output ports are not masked. When the bit is set to 0, the configurations for output ports will be ignored.

Object	Data Type	Read/Write	Description
0x6308:01	Unsigned16	RW	Objects for 16-channel digital output module
0x6328:01	Unsigned32	RW	Objects for 32-channel digital output module
0x6208:01	Unsigned8	RW	Objects for 8-channel digital output module

4.3 Analog Input Configuration Parameters

4.3.1 Analog Input Signal Type

The analog input signal type of COP devices can be set via object 0x2400:00, with every 4 bits corresponding to one channel. The default value is 0 for all channels, which represents -10V~+10V voltage signal input. The setting values and input signal types are consistent with those of object 0x805:00 of the ECP module. The configuration objects for the signal types of analog input channels are shown in the table below.

Object	Data Type	Read/Write	Description
0x2400:00	Unsigned16	RW	Set the signal type of analog input channels, with every 4 bits corresponding to one channel. The default value is 0 for all channels, which represents a voltage signal input of -10V to +10V.

The feedback values of each input signal type are shown in the table below.

	Value of 4-bit	Working Mode	Sampling Value Range
Voltage-type	B0000	-10 V ~ +10 V	-32000~+32000
	B0001	0 ~+10 V	0~32000
	B0010	-5 V ~+5 V	-32768~+32000
	B0011	0 ~ +5 V	0~32000
	B0100	1~ +5V	0~32000
Current-type	B0101	4~20mA	0~32000
	B0110	0~20mA	0~32000
	B0111	-20~+20mA	-32000 ~ +32000
	Others	Rsv.	/

4.3.2 Analog Input Offset

The analog input offset is the sampled value when a 0V signal is connected to the analog input port. This value is used to calibrate the output sampling channel, and users generally do not need to perform this operation. For special requirements, users can set the object “0x2431” to compensate for the zero-level offset error.

Object	Data Type	Read/Write	Description
0x2431:01	INTEGER16	RW	Zero level offset value of analog input channel 0, default is 0. The setting value ranges from -1600 to 1600.
0x2431:02	INTEGER16	RW	Zero level offset value of analog input channel 1, default is 0. The setting value ranges from -1600 to 1600.
0x2431:03	INTEGER16	RW	Zero level offset value of analog input channel 2, default is 0. The setting value ranges from -1600 to 1600.
0x2431:04	INTEGER16	RW	Zero level offset value of analog input channel 3, default is 0. The setting value ranges from -1600 to 1600.
0x6431:01	INTEGER32	RW	The zero-level offset value of input channel 0.
0x6431:02	INTEGER32	RW	The zero-level offset value of input channel 1.
0x6431:03	INTEGER32	RW	The zero-level offset value of input channel 2.

Object	Data Type	Read/Write	Description
0x6431:04	INTEGER32	RW	The zero-level offset value of input channel 3.

After setting the offset value, adjust the sampling feedback value to 0 when the original input is 0V, which means subtracting the deviation value from the original sampling value. The object 0x6431 provides the same function. This object is uncalibrated, and users can perform secondary offset calibration on the sampling value through this object when needed.

4.3.3 Gain Compensation Coefficient

There is a gain error in the analog input sampling circuit. Users can compensate for the gain error through the 0x2432 object. The default value of this object is 30000. When the set value is x, the sampled value of the input signal will be multiplied by x/30000.

Object	Data Type	Read/Write	Description
0x2432:01	Unsigned16	RW	Gain compensation coefficient for analog input channel 0, default value is 30000. When the set value is x, the sampled value of the input signal will be multiplied by x/30000.
0x2432:02	Unsigned16	RW	Gain compensation coefficient for analog input channel 1, default value is 30000. When the set value is x, the sampled value of the input signal will be multiplied by x/30000.
0x2432:03	Unsigned16	RW	Gain compensation coefficient for analog input channel 2, default value is 30000. When the set value is x, the sampled value of the input signal will be multiplied by x/30000.
0x2432:04	Unsigned16	RW	Gain compensation coefficient for analog input channel 3, default value is 30000. When the set value is x, the sampled value of the input signal will be multiplied by x/30000.
0x6432:01	INTEGER32	RW	Gain compensation coefficient of input channel 0. The default value is 100000. When the set value is x, the sampled value of the input signal will be multiplied by x/100000.
0x6432:02	INTEGER32	RW	Gain compensation coefficient of input channel 1. The default value is 100000. When the set value is x, the sampled value of the input signal will be multiplied by x/100000.
0x6432:03	INTEGER32	RW	Gain compensation coefficient of input channel 2. The default value is 100000. When the set value is x, the sampled value of the input signal will be multiplied by x/100000.
0x6432:04	INTEGER32	RW	Gain compensation coefficient of input channel 3. The default value is 100000. When the set value is x, the sampled value of the input signal will be multiplied by x/100000.

Object 0x6432 provides the same function, through which users can perform re-gain compensation on the sampled values.

4.4 Analog Output Configuration Parameters

4.4.1 Analog Output Mode and Output Value

The analog output module supports multiple operating modes, which can be configured via object dictionary 0x2400:00. This object is a 16-bit value, with every four bits corresponding to one input channel in sequence (e.g., Bit3..0 is used to set the operating mode of the AO_0 channel, and Bit7..4 is used to set the operating mode of the AO_1 channel).

Object	Data Type	Read/Write	Description
0x2400:00	Unsigned16	RW	Set the signal type of analog output channels, with every 4 bits corresponding to one channel. The default value is 0 for all channels, which represents a voltage signal input of -10V to +10V.

The default operating mode of each channel is voltage mode with a range of -10V to +10V.

	Value of 4-bit	Working Mode	Sampling Value Range
Voltage-type	B0000	-10 V ~ +10 V	-32000~+32000
	B0001	0 ~+10 V	0~32000
	B0010	-5 V ~+5 V	-32768~+32000
	B0011	0 ~ +5 V	0~32000
	B0100	1~ +5V	0~32000
Current-type	B0101	4~20mA	0~32000
	B0110	0~20mA	0~32000
	Others	Rsv.	/

4.4.2 Analog Output Offset

Each channel's output value is provided with an object for setting the offset value when the output is 0. For example, under the operating mode of -10V~+10V, when Channel 0 outputs 0, its actual measured output voltage is 0.1V, and the corresponding setting code value is calculated as 0.1*32000/10 = 320. Setting the zero-level offset value to 320 enables the output to be 0V when the set output is 0. Object 0x2431 is the factory-calibrated value by the manufacturer, and users are not recommended to modify it. The zero-level offset setting objects for each channel are shown in the table below.

Object	Data Type	Read/Write	Description
0x2431:01	INTEGER16	RW	Zero input deviation of analog output channel 0, default value is 0. The setting value ranges from -1600 to 1600.
0x2431:02	INTEGER16	RW	Zero input deviation of analog output channel 1, default value is 0. The setting value ranges from -1600 to 1600.
0x2431:03	INTEGER16	RW	Zero input deviation of analog output channel 2, default value is 0. The setting value ranges from -1600 to 1600.
0x2431:04	INTEGER16	RW	Zero input deviation of analog output channel 3, default value is 0. The setting value ranges from -1600 to 1600.

4.4.3 Gain Compensation Coefficient

There is a gain error in the analog output channel, and users can compensate for the gain error through the object 0x2432. The default value of this object is 30000. When the set value is x, the sampled value of the output signal will be multiplied by x/30000. The setting range of x is 38000 to 42000.

Object	Data Type	Read/Write	Description
0x2432:01	Unsigned16	RW	Gain compensation coefficient of analog output channel 0, default value is 30000.
0x2432:02	Unsigned16	RW	Gain compensation coefficient of analog output channel 1, default value is 30000.
0x2432:03	Unsigned16	RW	Gain compensation coefficient of analog output channel 2, default value is 30000.
0x2432:04	Unsigned16	RW	Gain compensation coefficient of analog output channel 3, default value is 30000.

4.4.4 Output Mode and Output Value

During the operation of the analog output module, when it exits the Operational state due to detected hardware faults or communication network abnormalities, the output state of the output channels can be configured via the fail-safe output mode object 0x6443 and the fail-safe output value object 0x6444.

The default value of the fail-safe output mode is 1, which means the module will output the value configured in the fail-safe output value object when an abnormality occurs. When set to 0, the output value will maintain its current output state upon an abnormality. The related objects are shown in the table below.

Object	Data Type	Read/Write	Description
0x6443:01	Unsigned8	RW	The default value is 1. When the module is abnormal or exits OP, channel 0 outputs the setting value of 0x6444:01. When set to 0, the current output is maintained upon module abnormality or OP exit.
0x6443:02	Unsigned8	RW	The default value is 1. When the module is abnormal or exits OP, channel 1 outputs the setting value of 0x6444:01. When set to 0, the current output is maintained upon module abnormality or OP exit.
0x6443:03	Unsigned8	RW	The default value is 1. When the module is abnormal or exits OP, channel 2 outputs the setting value of 0x6444:01. When set to 0, the current output is maintained upon module abnormality or OP exit.
0x6443:04	Unsigned8	RW	The default value is 1. When the module is abnormal or exits OP, channel 3 outputs the setting value of 0x6444:01. When set to 0, the current output is maintained upon module abnormality or OP exit.
0x6444:01	INTEGER32	RW	When the value of object 0x6443:01 is 1, the output value of channel 0 upon module abnormality or OP exit.
0x6444:02	INTEGER32	RW	When the value of object 0x6443:01 is 1, the output value of channel 1 upon module abnormality or OP exit.
0x6444:03	INTEGER32	RW	When the value of object 0x6443:01 is 1, the output value of channel 2 upon module abnormality or OP exit.
0x6444:04	INTEGER32	RW	When the value of object 0x6443:01 is 1, the output value of channel 3

Object	Data Type	Read/Write	Description
			upon module abnormality or OP exit.

4.5 RTD Configuration Parameterse

The thermal resistance module supports temperature sampling with multiple types of sensors. The temperature sampling value is a 16-bit signed integer with a unit of 0.1℃. After entering the Operational state, data is transmitted via PDO by default.

Object	Data Type	Read/Write	Description
0x6401:01	INTEGER16	RO	Temperature value sampled by RTD0, unit: 0.1℃.
0x6401:02	INTEGER16	RO	Temperature value sampled by RTD1, unit: 0.1℃.
0x6401:03	INTEGER16	RO	Temperature value sampled by RTD2, unit: 0.1℃.
0x6401:04	INTEGER16	RO	Temperature value sampled by RTD3, unit: 0.1℃.

4.5.1 Types of Thermal Resistance Sensors

The thermal resistance temperature measurement module supports multiple types of RTD temperature sensors. Users shall correctly configure the sensor type according to the sensor connected to the channel. The object for configuring the sensor type is 0x2008:00.

Object	Data Type	Read/Write	Description
0x2008:00	Unsigned16	RW	RTD temperature sensor type. Each 4 bits from the low bit to the high bit are used to set the sensor types of RTD channels 0~3.

The sensor type of each channel is defined by 4 groups of 4-bit data from object 0x2008:00, which configures the sensor types for 4 channels. The corresponding sensor types for 4-bit values are shown in the table below:

Sensor Type	Value of 4-bit
PT100	B0000
PT500	B0001
PT1000	B0010
Cu100	B0011
KTY84	B0100

4.5.2 Temperature Offset

There are certain errors existing in the sampling channels of the thermal resistance sensor and the sensor itself. The thermal resistance module provides error calibration parameters. The offset object 0x2431 allows users to set temperature deviation parameters to correct the deviation value of temperature sampling. The temperature unit is 0.1 of the set temperature unit.

Object	Data Type	Read/Write	Description
0x2431:01	INTEGER16	RW	Temperature deviation value of Channel 0.
0x2431:02	INTEGER16	RW	Temperature deviation value of Channel 1.
0x2431:03	INTEGER16	RW	Temperature deviation value of Channel 2.
0x2431:04	INTEGER16	RW	Temperature deviation value of Channel 3.

4.5.3 Gain Compensation Coefficient

The thermal resistance module provides users with the gain error compensation object "0x2432" for temperature sampling. Users can calibrate the gain error of the sampled temperature by configuring this object. The default value of this object is 30000。 If the value of this object is set to x, the compensated gain value obtained will be x/30000.

Object	Data Type	Read/Write	Description
0x2432:01	Unsigned16	RW	Channel 0 temperature gain compensation value. The default value is 30000, and when the set value is x, the output signal setting value will be multiplied by x/30000.
0x2432:02	Unsigned16	RW	Channel 1 temperature gain compensation value. The default value is 30000, and when the set value is x, the output signal setting value will be multiplied by x/30000.
0x2432:03	Unsigned16	RW	Channel 2 temperature gain compensation value. The default value is 30000, and when the set value is x, the output signal setting value will be multiplied by x/30000.
0x2432:04	Unsigned16	RW	Channel 3 temperature gain compensation value. The default value is 30000, and when the set value is x, the output signal setting value will be multiplied by x/30000.

4.5.4 RTD Temperature Alarm Detection

The thermal resistance module provides users with temperature detection and alarm functions. Users can enable and set the upper and lower limit values of the temperature alarm. Each configuration parameter object is shown in the table below.

Object	Data Type	Read/Write	Description
0x2004:01	INTEGER16	RW	Upper limit value for temperature alarm of Channel 0. The upper limit must be greater than the lower limit to enable the alarm detection function.
0x2004:02	INTEGER16	RW	Channel 0 temperature alarm lower limit value.
0x2004:03	INTEGER16	RW	Upper limit value for temperature alarm of Channel 1. The upper limit must be greater than the lower limit to enable the alarm detection function.
0x2004:04	INTEGER16	RW	Channel 1 temperature alarm lower limit value.
0x2004:05	INTEGER16	RW	Upper limit value for temperature alarm of Channel 2. The upper limit must be greater than the lower limit to enable the alarm detection function.
0x2004:06	INTEGER16	RW	Channel 2 temperature alarm lower limit value.
0x2004:07	INTEGER16	RW	Upper limit value for temperature alarm of Channel 3. The upper limit must be greater than the lower limit to enable the alarm detection function.
0x2004:08	INTEGER16	RW	Channel 3 temperature alarm lower limit value.
0x2005:00	Unsigned16	RW	Enable the upper and lower limit temperature alarm detection function. Bits BIT0~3 correspond to enabling the upper and lower limit

Object	Data Type	Read/Write	Description
			temperature detection function of RTD0~3 respectively. When the bit is set to 0, the corresponding RTD channel disables the upper and lower limit temperature alarm detection.

By default, the over-temperature detection is disabled. If this function is required, users need to set the upper and lower limit values for temperature detection during initialization to enable the temperature limit detection.

4.5.5 Filtering Level

Filtering level setting can calculate the average value of temperature sampling within the multiple sample values and feed it back to the user. It enables relatively smooth temperature values and reduces the impact of temperature noise. The default setting time is level 2, with an adjustable range from 0 to 9. A setting of 0 means no filtering processing is performed.

Object	Data Type	Read/Write	Description
0x2007:00	Unsigned8	RW	Filtering level, setting range: 0~9, default value: 2.

4.5.6 Sampling Time

The sampling time of the thermal resistance reflects the temperature update cycle. The default value is 0, which means the sampled temperature is updated every 250ms. When set to 1, the update time is 500ms, and when set to 2, it is 1s.

Object	Data Type	Read/Write	Description
0x2009:00	Unsigned16	RW	RTD temperature sampling time setting, default value is 0, corresponding to a 250ms sampling period. The setting range is 0~2.

The relationship between the set value of the sampling period and the actual sampling period.

Sampling Period	Set value
250ms	0 (Default)
500ms	1
1000ms	2

4.5.7 Module Status Parameters

The thermal resistance temperature measurement module provides users with 1-byte operating status feedback of the thermal resistor.

Thermal Resistance State (1Byte)				
Bit7..Bit6	Bit5	Bit4..Bit2	Bit1	Bit0
Rsv.	Disconnected	Rsv.	Over lower limit	Over upper limit

The bit is set to 1, indicating that the corresponding event has occurred.

The status of each RTD channel is reflected by module status via object 0x200A, as shown in the table below.

Object	Data Type	Read/Write	Description
0x200A:01	Unsigned16	RO	Operating status of RTD channel 0.
0x200A:02	Unsigned16	RO	Operating status of RTD channel 1.
0x200A:03	Unsigned16	RO	Operating status of RTD channel 2.
0x200A:04	Unsigned16	RO	Operating status of RTD channel 3.

4.5.8 Temperature Unit

Setting of temperature unit for thermal resistance sampling. The default value is 0, which means the temperature unit is ℃.

Object	Data Type	Read/Write	Description
0x200B:00	Unsigned16	RW	The sampling of each RTD temperature channel is used for target temperature unit configuration. The default value is 0, with the unit being °C, and the setting range is 0~2. 2 bits per channel.

The relationship between the value of the temperature unit setting object and the temperature unit.

Temperature Unit	Set value
Celsius °C	0 (default)
Fahrenheit °F	1
Kelvin K	2

4.5.9 Temperature Offset Value

Provide users with the calibration object 0x2006 for temperature sampling values. The setting range of this temperature offset value is -500.0℃ ~ +500.0℃, corresponding to the calibration range of the sampling temperature feedback value from -5000 to +5000. This function can be used for sampling value calibration at the user level.

Object	Data Type	Read/Write	Description
0x2006:01	INTEGER16	RW	Offset of temperature sampling value for RTD0, default value is 0.
0x2006:02	INTEGER16	RW	Offset of temperature sampling value for RTD1, default value is 0.
0x2006:03	INTEGER16	RW	Offset of temperature sampling value for RTD2, default value is 0.
0x2006:04	INTEGER16	RW	Offset of temperature sampling value for RTD3, default value is 0.

After power-on, the temperature offset value is 0. Its unit changes in sync with the temperature unit setting, equivalent to 0.1 Units of the temperature unit.

4.6 TC Configuration Parameters

The thermocouple module supports temperature sampling with multiple types of sensors. The temperature sampling value is a 16-bit signed integer with a unit of 0.1℃. After entering the Operational state, data is sent via PDO by default.

Object	Data Type	Read/Write	Description
0x6401:01	INTEGER16	RO	The temperature value sampled by TC0, unit: 0.1℃.
0x6401:02	INTEGER16	RO	The temperature value sampled by TC1, unit: 0.1℃.

Object	Data Type	Read/Write	Description
0x6401:03	INTEGER16	RO	The temperature value sampled by TC2, unit: 0.1℃.
0x6401:04	INTEGER16	RO	The temperature value sampled by TC3, unit: 0.1℃.
0x6401:05	INTEGER16	RO	Temperature value sampled by the cold junction temperature compensation channel, unit: 0.1℃.

The temperature feedback value of the thermocouple is the temperature value after cold junction temperature compensation. The temperature value for cold junction compensation is fed back via object 0x6401:05. Since the thermocouple temperature and cold junction temperature compensation value exceed 8 bytes, two PDOs are used to transmit the sampled temperature values. The second PDO transmits the cold junction temperature compensation value and the status words of each channel.

4.6.1 Types of Thermocouple Sensors

Thermocouple temperature sensors support multiple types of sensors. The thermal resistance sensors used for cold junction temperature compensation support more sensor types than ordinary thermal resistance sensors. These sensor types can be configured via object 0x2008:00. Each 4 bits are used to set the sensor status of one channel, and the 7th 4-bit group from the low bit to the high bit is used to configure the type of the cold junction temperature compensation thermal resistance sensor. The sensor type configuration objects are shown in the table below.

Object	Data Type	Read/Write	Description
0x2008:00	Unsigned32	RW	Temperature sensor type. Each 4 bits from the low bit to the high bit are used to set the sensor types for TC channels 0~5 and cold junction compensation.

The correspondence between the sensor type and setting value of thermocouple temperature sensors is shown in the table below.

Sensor Type	Value of 4-bit
K	B0000
B	B0001
E	B0010
N	B0011
J	B0100
R	B0101
S	B0110
T	B0111

The relationship between the types of thermal resistance temperature sensors and their set values is shown in the table below.

Sensor Type	Value of 4-bit
PT100	B0000
PT500	B0001
PT1000	B0010
Cu100	B0011

Sensor Type	Value of 4-bit
KTY84	B0100

4.6.2 Thermocouple Offset

There are inherent errors in the sampling channels of thermocouple sensors and the sensors themselves. The thermocouple module provides error calibration parameters. The offset object 0x2431 allows users to set temperature deviation parameters to correct the deviation values of temperature sampling. This object is commonly used by manufacturers to configure calibration parameters.

Object	Data Type	Read/Write	Description
0x2431:01	INTEGER16	RW	Temperature offset of Channel 0. Unit: 0.1℃
0x2431:02	INTEGER16	RW	Temperature offset of Channel 1. Unit: 0.1℃
0x2431:03	INTEGER16	RW	Temperature offset of Channel 2. Unit: 0.1℃
0x2431:04	INTEGER16	RW	Temperature offset of Channel 3. Unit: 0.1℃
0x2431:05	INTEGER16	RW	Cold junction compensation channel temperature offset value. Unit: 0.01℃.

The thermocouple module provides users with object “0x2006: for offset adjustment of temperature feedback values. Users can configure this object to implement the correction function of temperature offset. For example, setting the value of “0x2006:01” from 0 to 5 can correct the previously sampled value T0 to T0-5, which reduces the feedback temperature value of channel 0 by 0.5℃.

Object	Data Type	Read/Write	Description
0x2006:01	INTEGER16	RW	Temperature offset of Channel 0. Unit: 0.1℃
0x2006:02	INTEGER16	RW	Temperature offset of Channel 1. Unit: 0.1℃
0x2006:03	INTEGER16	RW	Temperature offset of Channel 2. Unit: 0.1℃
0x2006:04	INTEGER16	RW	Temperature offset of Channel 3. Unit: 0.1℃
0x2006:05	INTEGER16	RW	Cold junction compensation channel temperature offset value. Unit: 0.01℃.

4.6.3 Thermocouple Gain Compensation Coefficient

The thermocouple module provides users with the gain error compensation object “0x2432” for temperature sampling. Users can calibrate the gain error of the sampled temperature by configuring this object. The default value of this object is 30000. If the value of this object is set to x, the compensated gain value obtained will be x/30000.

When using a thermal resistance sensor for temperature compensation, the gain compensation coefficient can be configured via the object “0x2432:07”. The objects used for setting the gain compensation coefficient are listed in the table below.

Object	Data Type	Read/Write	Description
0x2432:01	Unsigned16	RW	Temperature gain compensation value of Channel 0. The default value is 30000. When the set value is x, the output signal set value will be multiplied by x/30000.
0x2432:02	Unsigned16	RW	Temperature gain compensation value of Channel 1. The default value is 30000. When the set value is x, the output signal set value will be

Object	Data Type	Read/Write	Description
			multiplied by x/30000.
0x2432:03	Unsigned16	RW	Temperature gain compensation value of Channel 2. The default value is 30000. When the set value is x, the output signal set value will be multiplied by x/30000.
0x2432:04	Unsigned16	RW	Temperature gain compensation value of Channel 3. The default value is 30000. When the set value is x, the output signal set value will be multiplied by x/30000.
0x2432:05	Unsigned16	RW	Cold junction temperature compensation channel temperature gain compensation value. The default value is 30000.

4.6.4 Thermocouple Temperature Alarm Detection

The thermocouple module provides users with temperature detection and alarm functions. Users can enable and set the upper and lower limit values for temperature alarms. Each configuration parameter object is shown in the table below.

Object	Data Type	Read/Write	Description
0x2004:01	INTEGER16	RW	Upper temperature alarm limit for Channel 0. The upper limit must be greater than the lower limit to enable the alarm detection function.
0x2004:02	INTEGER16	RW	Lower temperature alarm limit for Channel 0.
0x2004:03	INTEGER16	RW	Upper limit value of temperature alarm for Channel 1. The upper limit must be greater than the lower limit to enable the alarm detection function.
0x2004:04	INTEGER16	RW	Channel 1 Temperature Alarm Lower Limit。
0x2004:05	INTEGER16	RW	Upper temperature alarm limit for Channel 2. The upper limit must be greater than the lower limit to enable the alarm detection function.
0x2004:06	INTEGER16	RW	Channel 2 temperature alarm lower limit value.
0x2004:07	INTEGER16	RW	Upper temperature alarm limit for Channel 3. The upper limit must be greater than the lower limit to enable the alarm detection function.
0x2004:08	INTEGER16	RW	Lower limit of temperature alarm for Channel 3.
0x2005:00	Unsigned16	RW	Enable the upper and lower temperature limit alarm detection function. Bits BIT0~5 correspond to enabling the upper and lower temperature limit detection functions of TC0~3. When the bit is set to 0, the corresponding RTD channel disables the upper and lower temperature limit alarm detection.

By default, the over-temperature detection is disabled. If this function is required, users need to set the upper and lower limits of temperature detection during initialization to enable the temperature limit detection.

4.6.5 Filtering Level

Filtering level setting can calculate the average value of temperature sampling within the multiple sample values and feed it back to the user. It enables relatively smooth temperature values and reduces the impact of temperature noise. The default setting time is level 2, with an adjustable range from 0 to 9. A setting of 0 means no filtering processing is performed.

Object	Data Type	Read/Write	Description
0x2007:00	Unsigned8	RW	Filtering level, setting range: 0~9, default value: 2.

4.6.6 Sampling Time

Thermocouple sampling time and reaction temperature update cycle. The default value is 0, which means the sampled temperature is updated every 250ms. When set to 1, the update time is 500ms, and when set to 2, it is 1s.

Object	Data Type	Read/Write	Description
0x2009:00	Unsigned16	RW	TC temperature sampling time setting, default value is 0, corresponding to a 250ms sampling period.

4.6.7 Module Status Parameters

Thermocouple Temperature Measurement Module (P316) provides users with 1-byte operating status feedback of the thermocouple.。

热电偶状态（1Byte）				
Bit7..Bit6	Bit5	Bit4..Bit2	Bit1	Bit0
Rsv.	Disconnected	Rsv.	Over lower limit	Over upper limit

A bit value of 1 indicates that the corresponding event has occurred.

The module status reflects the states of each TC channel and the cold junction temperature compensation channel through object 0x200A, as shown in the table below.

Object	Data Type	Read/Write	Description
0x200A:01	Unsigned16	RO	Working status of TC0.
0x200A:02	Unsigned16	RO	Working status of TC1.
0x200A:03	Unsigned16	RO	Working status of TC2.
0x200A:04	Unsigned16	RO	Working status of TC3.
0x200A:05	Unsigned16	RO	Working Status of Cold Junction Compensation Channel.

After disconnecting the thermal resistance sensor, cold junction temperature compensation will automatically use the temperature of the equipment terminal block for cold junction temperature compensation.

4.6.8 Cold Junction Temperature Compensation

In the P316 module, cold junction temperature compensation supports connecting an RTD temperature sensor to sample the cold junction temperature for temperature compensation. When no RTD is connected, the module automatically uses the temperature from its own sensor terminal as the cold junction junction temperature for compensation.

4.6.9 Temperature Unit

Thermocouple sampling temperature unit setting. The default value is 0, which means the temperature unit is ℃.

Object	Data Type	Read/Write	Description
0x200B:00	Unsigned16	RW	The sampling of each TC temperature channel is used for target temperature unit configuration. The default value is 0, with the unit being °C and a setting range of 0 to 2. It occupies 2 bits per channel.

The relationship between the value of the temperature unit setting object and the temperature unit.

Temperature Unit	Set value
Celsius °C	0 (Default)
Fahrenheit °F	1
Kelvin K	2

4.6.10 Temperature Offset Value

The correction object 0x2006 that provides temperature sampling value correction for users. The setting range of this temperature offset value is -500.0℃ ~ +500.0℃, corresponding to the correction range of sampling temperature feedback values from -5000 to +5000. This function can be used for sampling value correction at the user level.

Object	Data Type	Read/Write	Description
0x2006:01	INTEGER16	RW	Offset of temperature sampling value for TC0, default value is 0.
0x2006:02	INTEGER16	RW	Offset of temperature sampling value for TC1, default value is 0.
0x2006:03	INTEGER16	RW	Offset of temperature sampling value for TC2, default value is 0.
0x2006:04	INTEGER16	RW	Offset of temperature sampling value for TC3, default value is 0.

After power-on, the temperature offset value is 0. Its unit changes synchronously with the temperature unit setting, equivalent to 0.1 Units of the temperature unit.

5 PDO Mapping

PDO Mapping (Process Data Object Mapping) is used to map the process data object dictionary required for communication. The mapping types are divided into RxPDO Mapping and TxPDO Mapping, with their index ranges being 0x1600-0x17FF and 0x1A00-0x1BFF respectively, and the corresponding PDO parameters are 0x1400~0x15FFF and 0x1800~0x19FF.

The PDO of the COP series modules supports user remapping configuration. The default PDO transmission parameters and mapping parameters of each module are introduced as follows.。

5.1 P301-1616N/P302-1616P

The transmission parameter objects of RxPDO1~RxPDO4 are 0x1400~0x1403, and the corresponding PDO mapping objects are 0x1600 ~ 0x1603. The transmission parameters of RxPDO1 are shown in the table below.

Object	Name	Data Type	Read/Write	Default Value
0x1400:00	Number of entries	USINT	RO	5
0x1400:01	COB-ID	UDINT	RW	0x200+NodeID
0x1400:02	Transmission Type	USINT	RW	0xFF
0x1400:03	Inhibit Time	UINT	RW	0x0
0x1400:04	Compatibility Entry	USINT	RW	0x0
0x1400:05	Event Timer	UINT	RW	0x0

RxPDO2~RxPDO4 are disabled by default. The mapping object of RxPDO1 is 0x1600, which is mapped to the digital output object 0x6300:01.

Index	0x1600			
Sub-index	Name	Data Type	Read/Write	Default Value
0	Number of entries	USINT	RO	1
1	Mapping Object0	UDINT	RW	0x63000110
2	Mapping Object1	UDINT	RW	0
3	Mapping Object2	UDINT	RW	0
4	Mapping Object3	UDINT	RW	0

The transmission parameter objects of TxPDO1 to TxPDO4 are 0x1800 ~ 0x1803, and the corresponding PDO mapping objects are 0x1800 ~ 0x1803. The transmission parameters of TxPDO1 are shown in the table below.

Object	Name	Data Type	Read/Write	Default Value
0x1800:00	Number of entries	USINT	RO	5
0x1800:01	COB-ID	UDINT	RW	0x180+NodeID
0x1800:02	Transmission Type	USINT	RW	0xFE
0x1800:03	Inhibit Time	UINT	RW	0x0
0x1800:04	Compatibility Entry	USINT	RW	0x0
0x1800:05	Event Timer	UINT	RW	0x0

TxPDO2~TxPDO4 are disabled by default. TxPDO1 is mapped to object 0x1A00, which is mapped to the digital input object 0x6100:01.

Index	0x1A00			
Sub-index	Name	Data Type	Read/Write	Default Value
0	Number of entries	USINT	RO	1
1	Mapping Object0	UDINT	RW	0x61000110
2	Mapping Object1	UDINT	RW	0
3	Mapping Object2	UDINT	RW	0
4	Mapping Object3	UDINT	RW	0

5.2 P303-3200

The transmission parameter objects of RxPDO1~RxPDO4 are 0x1400~0x1403, and the corresponding PDO mapping objects are 0x1600 ~ 0x1603. RxPDO1~RxPDO4 are disabled by default.

The transmission parameter objects of TxPDO1~TxPDO4 are 0x1800 ~ 0x1803, and the corresponding PDO mapping objects are 0x1A00 ~ 0x1A03. The transmission parameters of TxPDO1 are shown in the table below.

Object	Name	Data Type	Read/Write	Default Value
0x1800:00	Number of entries	USINT	RO	5
0x1800:01	COB-ID	UDINT	RW	0x180+NodeID
0x1800:02	Transmission Type	USINT	RW	0xFE
0x1800:03	Inhibit Time	UINT	RW	0x0
0x1800:04	Compatibility Entry	USINT	RW	0x0
0x1800:05	Event Timer	UINT	RW	0x0

TxPDO2 to TxPDO4 are disabled by default. TxPDO1 is mapped to the object 0x1A00, which is mapped to the digital input object 0x6120:01.

Index	0x1A00			
Sub-index	Name	Data Type	Read/Write	Default Value
0	Number of entries	USINT	RO	1
1	Mapping Object0	UDINT	RW	0x61200120
2	Mapping Object1	UDINT	RW	0
3	Mapping Object2	UDINT	RW	0
4	Mapping Object3	UDINT	RW	0

5.3 P305-0032N/P306-0032P

The transmission parameter objects of RxPDO1~RxPDO4 are 0x1400~0x1403, and the corresponding PDO mapping objects are 0x1600 ~ 0x1603. The transmission parameters of RxPDO1 are shown in the table below.

Object	Name	Data Type	Read/Write	Default Value
0x1400:00	Number of entries	USINT	RO	5
0x1400:01	COB-ID	UDINT	RW	0x200+NodeID

Object	Name	Data Type	Read/Write	Default Value
0x1400:02	Transmission Type	USINT	RW	0xFF
0x1400:03	Inhibit Time	UINT	RW	0x0
0x1400:04	Compatibility Entry	USINT	RW	0x0
0x1400:05	Event Timer	UINT	RW	0x0

RxPDO2~RxPDO4 are disabled by default. The mapped object of RxPDO1 is 0x1600, which is mapped to the digital output object 0x6320:01.

Index	0x1600			
Sub-index	Name	Data Type	Read/Write	Default Value
0	Number of entries	USINT	RO	1
1	Mapping Object0	UDINT	RW	0x63200120
2	Mapping Object1	UDINT	RW	0
3	Mapping Object2	UDINT	RW	0
4	Mapping Object3	UDINT	RW	0

The transmission parameter objects of TxPDO1~TxPDO4 are 0x1800 ~ 0x1803, and the corresponding PDO mapping objects are 0x1800 ~ 0x1803. TxPDO1~TxPDO4 are disabled by default.

5.4 P307-2408N/P308-2408P

The transmission parameter objects of RxPDO1~RxPDO4 are 0x1400~0x1403, and the corresponding PDO mapping objects are 0x1600 ~ 0x1603. The transmission parameters of RxPDO1 are shown in the table below.

Object	Name	Data Type	Read/Write	Default Value
0x1400:00	Number of entries	USINT	RO	5
0x1400:01	COB-ID	UDINT	RW	0x200+NodeID
0x1400:02	Transmission Type	USINT	RW	0xFF
0x1400:03	Inhibit Time	UINT	RW	0x0
0x1400:04	Compatibility Entry	USINT	RW	0x0
0x1400:05	Event Timer	UINT	RW	0x0

RxPDO2 ~ RxPDO4 are disabled by default. The mapped object of RxPDO1 is 0x1600, which is mapped to the digital output object 0x6200:01.

Index	0x1600			
Sub-index	Name	Data Type	Read/Write	Default Value
0	Number of entries	USINT	RO	1
1	Mapping Object0	UDINT	RW	0x62000108
2	Mapping Object1	UDINT	RW	0
3	Mapping Object2	UDINT	RW	0
4	Mapping Object3	UDINT	RW	0

The transmission parameter objects of TxPDO1~TxPDO4 are 0x1800 ~ 0x1803, and the corresponding PDO mapping objects are 0x1800 ~ 0x1803. The transmission parameters of TxPDO1 are shown in the table below.

Object	Name	Data Type	Read/Write	Default Value
0x1800:00	Number of entries	USINT	RO	5
0x1800:01	COB-ID	UDINT	RW	0x180+NodeID
0x1800:02	Transmission Type	USINT	RW	0xFE
0x1800:03	Inhibit Time	UINT	RW	0x0
0x1800:04	Compatibility Entry	USINT	RW	0x0
0x1800:05	Event Timer	UINT	RW	0x0

TxPDO2 ~ TxPDO4 are disabled by default. The mapping object of TxPDO1 is 0x1A00, which is mapped to the digital input objects 0x6100:01~03.

Index	0x1A00			
Sub-index	Name	Data Type	Read/Write	Default Value
0	Number of entries	USINT	RO	3
1	Mapping Object0	UDINT	RW	0x60000108
2	Mapping Object1	UDINT	RW	0x60000208
3	Mapping Object2	UDINT	RW	0x60000308
4	Mapping Object3	UDINT	RW	0

5.5 P309-0008R

The transmission parameter objects of RxPDO1 to RxPDO4 are 0x1400 to 0x1403, and the corresponding PDO mapping objects are 0x1600 to 0x1603. The transmission parameters of RxPDO1 are shown in the table below.

Object	Name	Data Type	Read/Write	Default Value
0x1400:00	Number of entries	USINT	RO	5
0x1400:01	COB-ID	UDINT	RW	0x200+NodeID
0x1400:02	Transmission Type	USINT	RW	0xFF
0x1400:03	Inhibit Time	UINT	RW	0x0
0x1400:04	Compatibility Entry	USINT	RW	0x0
0x1400:05	Event Timer	UINT	RW	0x0

RxPDO2~RxPDO4 are disabled by default. The mapping object of RxPDO1 is 0x1600, which is mapped to the digital output object 0x6200:01.

Index	0x1600			
Sub-index	Name	Data Type	Read/Write	Default Value
0	Number of entries	USINT	RO	1
1	Mapping Object0	UDINT	RW	0x62000108
2	Mapping Object1	UDINT	RW	0
3	Mapping Object2	UDINT	RW	0
4	Mapping Object3	UDINT	RW	0

TxPDO1~TxPDO4 are disabled by default.

5.6 P311-AI04S

RxPDO1~RxPDO4 are disabled by default. The transmission parameter objects of TxPDO1~TxPDO4 are 0x1800 ~ 0x1803, and the corresponding PDO mapping objects are 0x1800 ~ 0x1803. The transmission parameters of TxPDO1 are shown in the table below.

Object	Name	Data Type	Read/Write	Default Value
0x1800:00	Number of entries	USINT	RO	5
0x1800:01	COB-ID	UDINT	RW	0x180+NodeID
0x1800:02	Transmission Type	USINT	RW	0xFE
0x1800:03	Inhibit Time	UINT	RW	0x0
0x1800:04	Compatibility Entry	USINT	RW	0x0
0x1800:05	Event Timer	UINT	RW	0x0

TxPDO2 to TxPDO4 are disabled by default. The mapped object of TxPDO1 is 0x1A00, which is mapped to the analog input objects 0x6401:01~04.

Index	0x1A00			
Sub-index	Name	Data Type	Read/Write	Default Value
0	Number of entries	USINT	RO	4
1	Mapping Object0	UDINT	RW	0x64010110
2	Mapping Object1	UDINT	RW	0x64010210
3	Mapping Object2	UDINT	RW	0x64010310
4	Mapping Object3	UDINT	RW	0x64010410

5.7 P312-AO04S

The transmission parameter objects of RxPDO1 to RxPDO4 are 0x1400 to 0x1403, and the corresponding PDO mapping objects are 0x1600 to 0x1603. The transmission parameters of RxPDO1 are shown in the table below.

Object	Name	Data Type	Read/Write	Default Value
0x1400:00	Number of entries	USINT	RO	5
0x1400:01	COB-ID	UDINT	RW	0x200+NodeID
0x1400:02	Transmission Type	USINT	RW	0xFF
0x1400:03	Inhibit Time	UINT	RW	0x0
0x1400:04	Compatibility Entry	USINT	RW	0x0
0x1400:05	Event Timer	UINT	RW	0x0

RxPDO2~RxPDO4 are disabled by default. The mapping object of RxPDO1 is 0x1600, which is mapped to the analog output objects 0x6411:01~04.

Index	0x1600			
Sub-index	Name	Data Type	Read/Write	Default Value
0	Number of entries	USINT	RO	1
1	Mapping Object0	UDINT	RW	0x64110110

Index	0x1600			
2	Mapping Object1	UDINT	RW	0x64110210
3	Mapping Object2	UDINT	RW	0x64110310
4	Mapping Object3	UDINT	RW	0x64110410

5.8 P315-RTD04

RxPDO1 to RxPDO4 are disabled by default. The transmission parameter objects of TxPDO1 to TxPDO4 are 0x1800 ~ 0x1803, and the corresponding PDO mapping objects are 0x1800 ~ 0x1803. The transmission parameters of TxPDO1 are shown in the table below:

Object	Name	Data Type	Read/Write	Default Value
0x1800:00	Number of entries	USINT	RO	5
0x1800:01	COB-ID	UDINT	RW	0x180+NodeID
0x1800:02	Transmission Type	USINT	RW	0xFE
0x1800:03	Inhibit Time	UINT	RW	0x0
0x1800:04	Compatibility Entry	USINT	RW	0x0
0x1800:05	Event Timer	UINT	RW	0x0

TxPDO2 to TxPDO4 are disabled by default. The mapped object of TxPDO1 is 0x1A00, and the mapped objects are the RTD temperature sampling value objects 0x6401:01~04.

Index	0x1A00			
Sub-index	Name	Data Type	Read/Write	Default Value
0	Number of entries	USINT	RO	4
1	Mapping Object0	UDINT	RW	0x64010110
2	Mapping Object1	UDINT	RW	0x64010210
3	Mapping Object2	UDINT	RW	0x64010310
4	Mapping Object3	UDINT	RW	0x64010410

The transmission parameters of TxPDO2 are shown in the table below.

Object	Name	Data Type	Read/Write	Default Value
0x1801:00	Number of entries	USINT	RO	5
0x1801:01	COB-ID	UDINT	RW	0x280+NodeID
0x1801:02	Transmission Type	USINT	RW	0xFE
0x1801:03	Inhibit Time	UINT	RW	0x0
0x1801:04	Compatibility Entry	USINT	RW	0x0
0x1801:05	Event Timer	UINT	RW	0x0

The mapped object of TxPDO2 is 0x1A01, which is mapped to the operating status object 0x200A:01~04 of the RTD channel.

Index	0x1A01			
Sub-index	Name	Data Type	Read/Write	Default Value
0	Number of entries	USINT	RO	4
1	Mapping Object0	UDINT	RW	0x200A0108

Index	0x1A01			
Sub-index	Name	Data Type	Read/Write	Default Value
2	Mapping Object1	UDINT	RW	0x200A0208
3	Mapping Object2	UDINT	RW	0x200A0308
4	Mapping Object3	UDINT	RW	0x200A0408

5.9 P316-TC04

RxPDO1~RxPDO4 are disabled by default. The transmission parameter objects of TxPDO1~TxPDO4 are 0x1800 ~ 0x1803, and the corresponding PDO mapping objects are 0x1800 ~ 0x1803. The transmission parameters of TxPDO1 are shown in the table below:

Object	Name	Data Type	Read/Write	Default Value
0x1800:00	Number of entries	USINT	RO	5
0x1800:01	COB-ID	UDINT	RW	0x180+NodeID
0x1800:02	Transmission Type	USINT	RW	0xFE
0x1800:03	Inhibit Time	UINT	RW	0x0
0x1800:04	Compatibility Entry	USINT	RW	0x0
0x1800:05	Event Timer	UINT	RW	0x0

TxPDO2~TxPDO4 are disabled by default. The mapping object of TxPDO1 is 0x1A00, which maps to the TC temperature sampling value objects 0x6401:01~04.

Index	0x1A00			
Sub-index	Name	Data Type	Read/Write	Default Value
0	Number of entries	USINT	RO	4
1	Mapping Object0	UDINT	RW	0x64010110
2	Mapping Object1	UDINT	RW	0x64010210
3	Mapping Object2	UDINT	RW	0x64010310
4	Mapping Object3	UDINT	RW	0x64010410
5	Mapping Object4	UDINT	RW	0
6	Mapping Object5	UDINT	RW	0
7	Mapping Object6	UDINT	RW	0
8	Mapping Object7	UDINT	RW	0

The transmission parameters of TxPDO2 are shown in the table below.

Object	Name	Data Type	Read/Write	Default Value
0x1801:00	Number of entries	USINT	RO	5
0x1801:01	COB-ID	UDINT	RW	0x280+NodeID
0x1801:02	Transmission Type	USINT	RW	0xFE
0x1801:03	Inhibit Time	UINT	RW	0x0
0x1801:04	Compatibility Entry	USINT	RW	0x0
0x1801:05	Event Timer	UINT	RW	0x0

The mapped object of TxPDO2 is 0x1A01, which maps to the cold junction compensation temperature value object 0x6401:05 and the operating status objects of each channel 0x200A:01~05.

Index	0x1A01			
Sub-index	**Name**	**Data Type**	**Read/Write**	**Default Value**
0	Number of entries	USINT	RO	6
1	Mapping Object0	UDINT	RW	0x64010510
2	Mapping Object1	UDINT	RW	0x200A0108
3	Mapping Object2	UDINT	RW	0x200A0208
4	Mapping Object3	UDINT	RW	0x200A0308
5	Mapping Object4	UDINT	RW	0x200A0408
6	Mapping Object5	UDINT	RW	0x200A0508
7	Mapping Object6	UDINT	RW	0
8	Mapping Object7	UDINT	RW	0

6 Network Configuration

6.1 Connection with ECP Series Products

The ECP series products support expanding up to four COP series products, enabling the information of COP devices to interact with EtherCAT master station devices via the EtherCAT network. It is required to correctly set the baud rate, ID and terminal resistance of COP series products through the DIP switch.

6.1.1 Baud Rate Setting

The communication rate of the CAN interface of the ECP series products operates at 1Mbps. Therefore, the baud rate of all COP devices connected to the CAN network of ECP series modules must be set to 1Mbps, which means both BIT5 and BIT6 of the DIP switch shall be set to the OFF state.

BIT6	BIT5	Baud Rate
OFF	OFF	1Mbps
OFF	ON	500kbps
ON	OFF	250kbps
ON	ON	125kbps

6.1.2 ID Setting

Bits 1 to 3 of the DIP switch on COP series products are used for device ID configuration. The device ID is equal to the binary value of Bits 3 to 1 plus 1 (for example, when BIT1 to BIT3 are all OFF, the ID is 1; when BIT0 to BIT3 are all ON, the ID is 16), and the configurable ID range is 1 to 16. For COP series devices connected to the same ECP series product, duplicate ID settings are not allowed.。

BIT4	BIT3	BIT2	BIT1	ID
OFF	OFF	OFF	OFF	1
OFF	OFF	OFF	ON	2
OFF	OFF	ON	OFF	3
OFF	OFF	ON	ON	4
OFF	ON	OFF	OFF	5
OFF	ON	OFF	ON	6
OFF	ON	ON	OFF	7
OFF	ON	ON	ON	8
ON	OFF	OFF	OFF	9
ON	OFF	OFF	ON	10
ON	OFF	ON	OFF	11
ON	OFF	ON	ON	12
ON	ON	OFF	OFF	13

BIT4	BIT3	BIT2	BIT1	ID
ON	ON	OFF	ON	14
ON	ON	ON	OFF	15
ON	ON	ON	ON	16

Due to the ID arbitration feature of the CAN network, when there are special real-time performance requirements for expansion modules, it is recommended to set the ID of the corresponding module to a relatively small value among the expansion modules (a smaller ID has a higher priority for data transmission).

6.1.3 Terminal Resistor Setting

The CAN interface of the ECP series products is already connected with a terminating resistor. To better ensure reliable communication of the CAN network, it is necessary to install a terminating resistor at the farthest end of the CAN network for ECP series products.

The CAN interface of COP series products is also pre-installed with a terminating resistor, and the enabling or disabling of this terminating resistor can be selected via DIP switch BIT7.

6.2 Connection with CAN Master

When COP series products form a system and establish a connection with a third-party CAN master station controller, the COP series devices need to configure the baud rate, ID and terminal resistor according to the CAN network configuration parameters of the third-party CAN master station controller. General Principles.

- The baud rate must be consistent with that of the master station.
- Do not set duplicate IDs within the same CAN network, including third-party CAN devices.
- If the COP device is located at the farthest position of the CAN network, set BIT7=ON and connect the terminating resistor; otherwise, set it to OFF.

7 Work with Inovance Compact PLC

7.1 Example of Control System Construction

Taking Easy521 as an example, this illustrates how to use the CAN interface module to establish a connection with the P301 module and build a control system. The connection method for more modules follows the same principle; however, it is necessary to ensure that CAN device IDs are configured without duplication, and that the IDs set in the software are consistent with those configured in the hardware.

7.2 Software Environment Configuration

Open the Autoshop Integrated Development Environment (V4.8.10 or higher required).

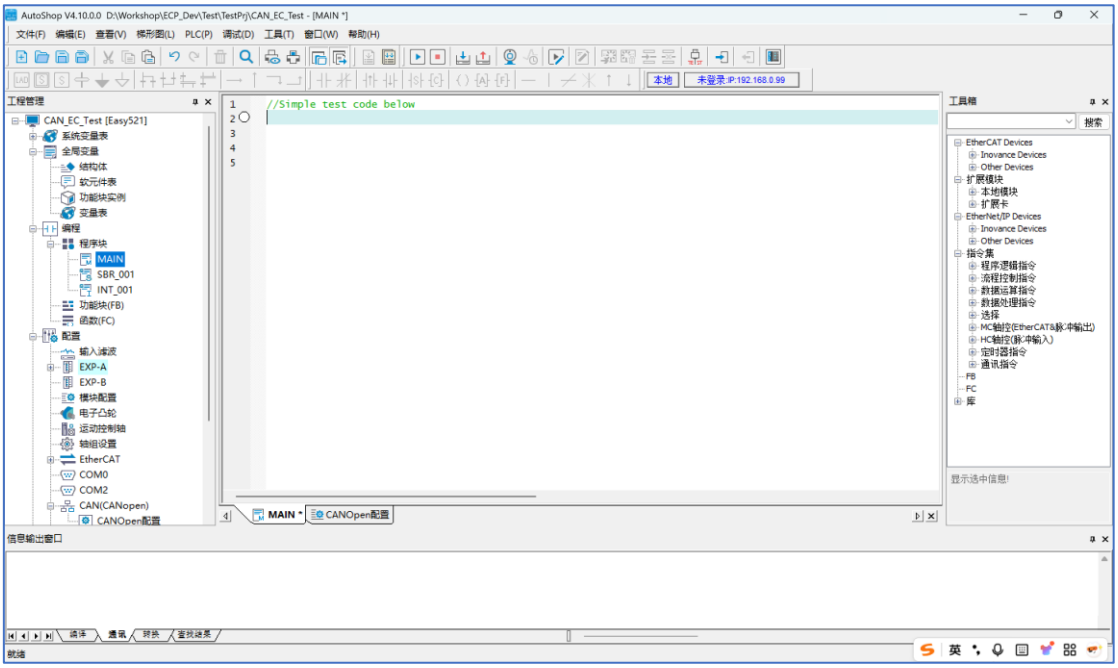

7.2.1 Create a New Project

From the main menu of the development environment, click “File” – “New Project” to open the new project page. On the new project page, set the project name, editor (programming language, with LiteST as an example), save path, project description, and controller model.

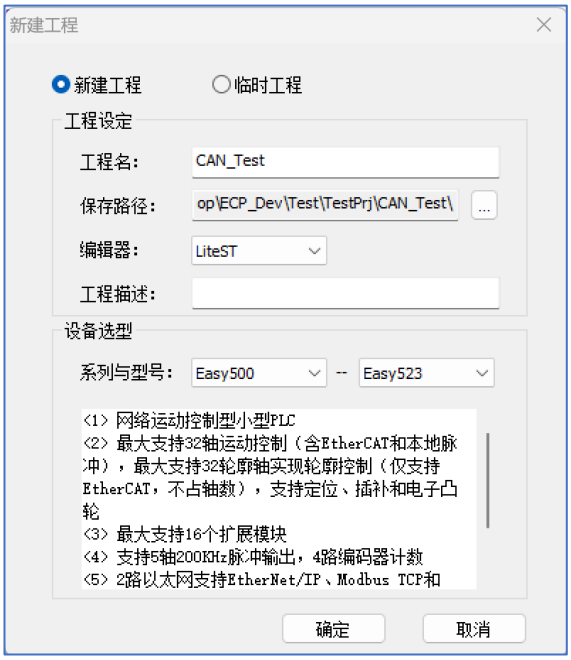

After completing the parameter settings for the new project, click "OK" to finish creating the project.

7.2.2 Select CAN Configuration

Double-click "CAN(CANlink)" in the project tree to open the configuration page, select CANopen, set the master station number to 63, and set the baud rate to 1000Kbps. After completing the configuration, CAN(CANlink) will be displayed as "CAN(CANopen)".

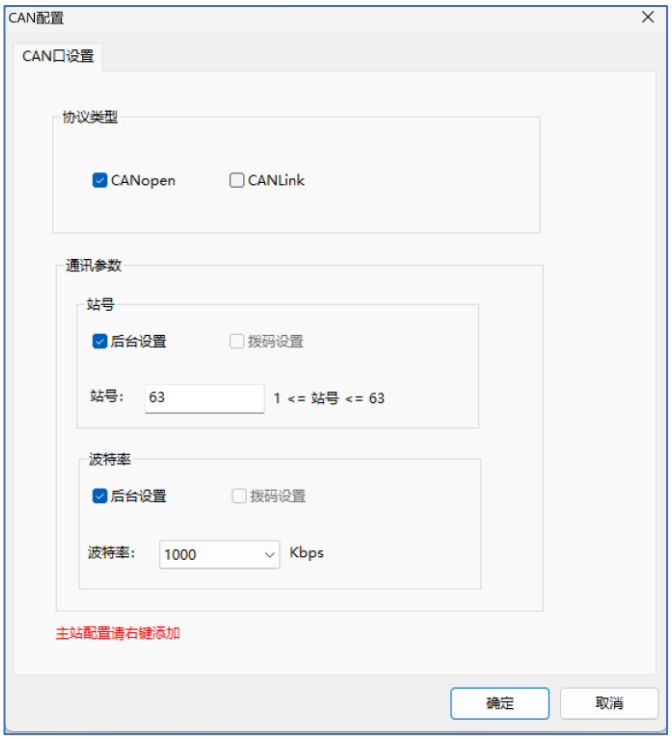

7.2.3 Add CAN Module

Locate EXP-A in the engineering tree, right-click and select "GE20-CAN-485" from the pop-up menu to add the hardware interface for the CAN network.。

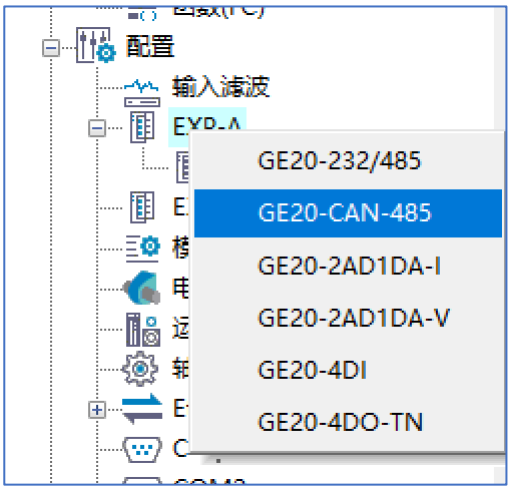

7.2.4 Add CAN Configuration

Right-click "CAN(CANopen)" in the engineering tree and select "Add CAN Configuration" to open the configuration and parameter setting page for the CAN network.

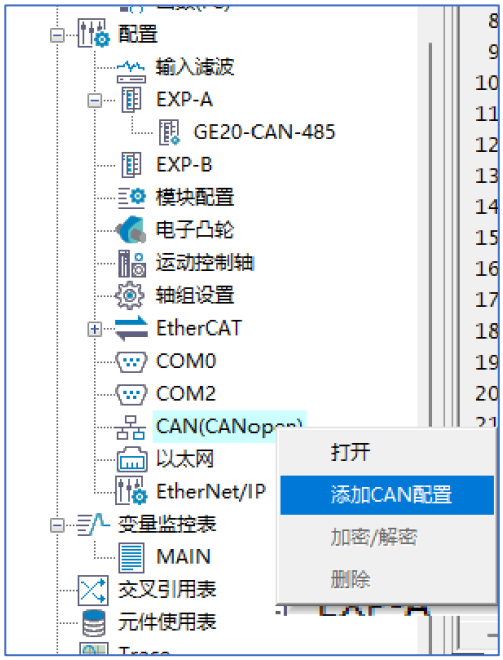

Double-click "CANopen Configuration" to open the CANopen configuration page. On this page, you can mainly complete the configuration of CAN network devices and the parameter settings of CAN master and slave devices.

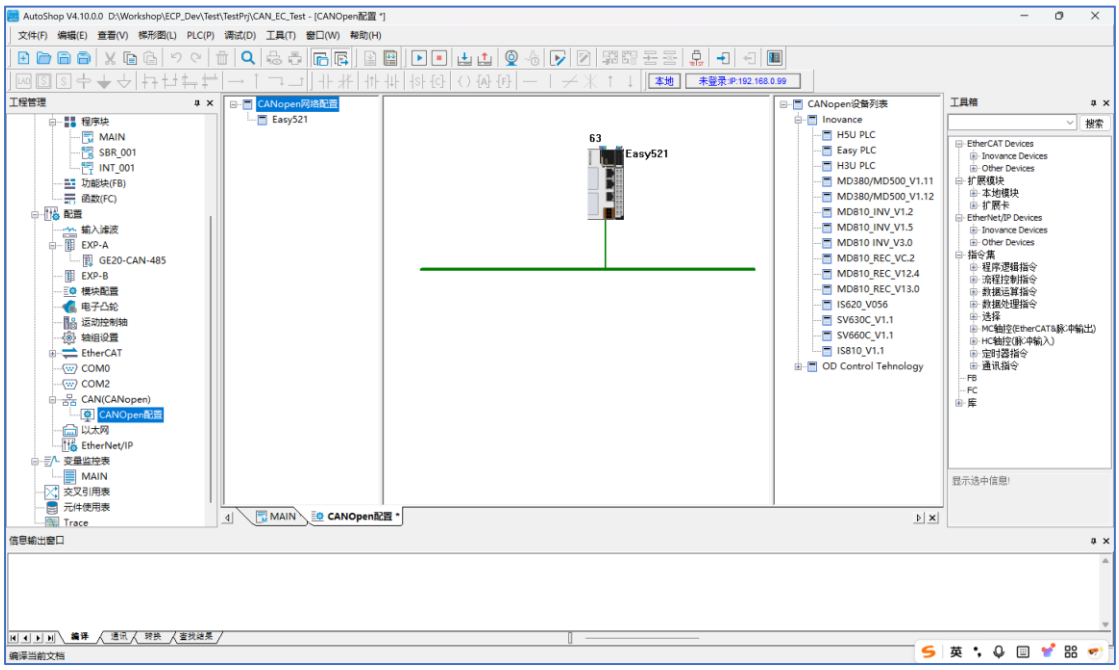

7.2.5 Add CAN Device

Select the CANopen device list, right-click and choose to import the EDS file of the device to be added from the right-click menu.

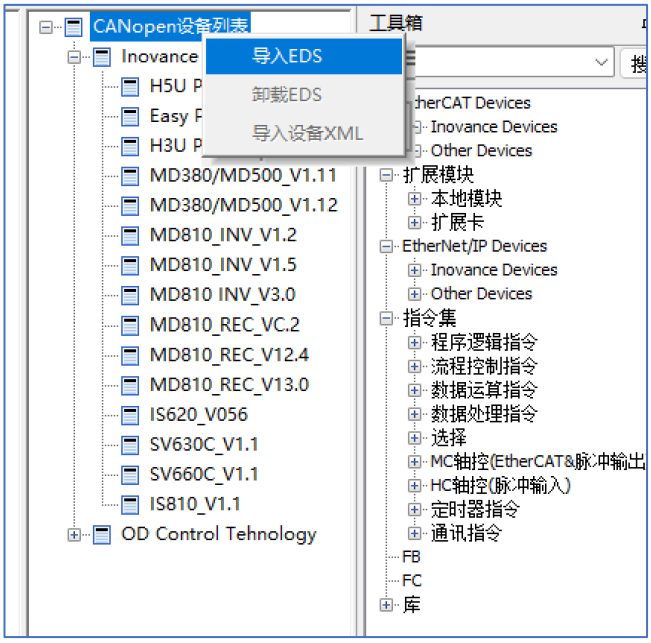

Select the EDS file to import.

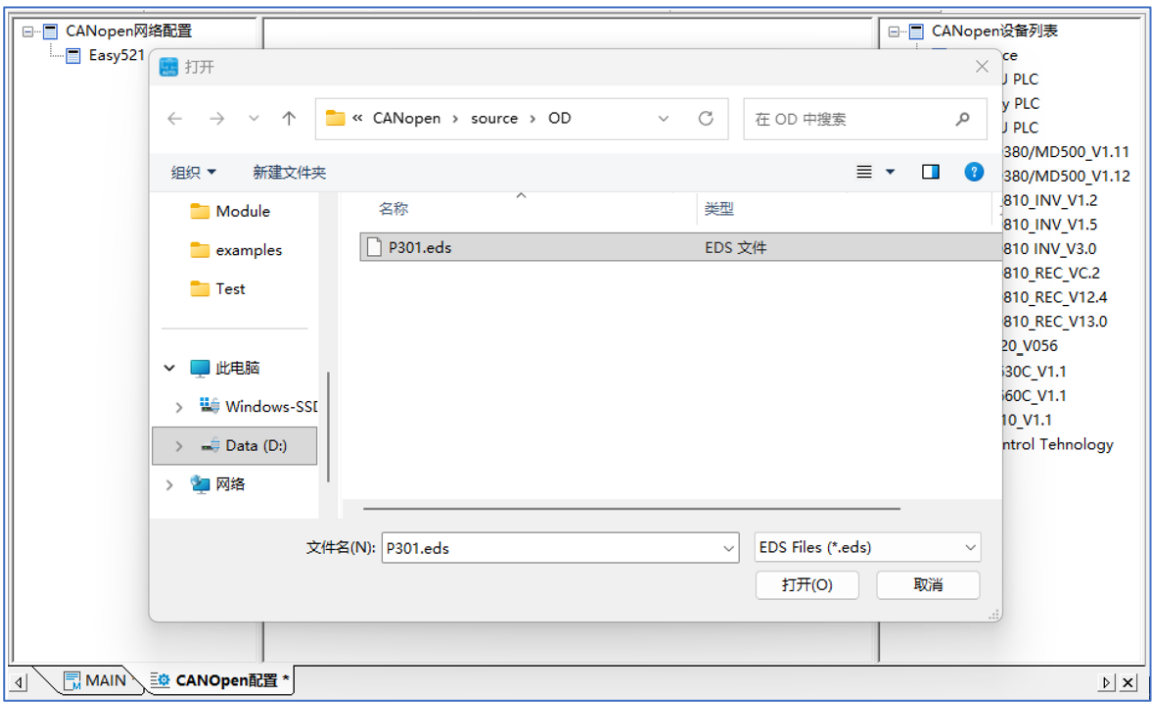

After importing the EDS file, the P301 device will appear in the CANopen device list. Select the P301 device and drag it with the mouse into the Easy521 configuration box in the middle. The CAN network will then be built, and the node ID of the device will be displayed above the device.

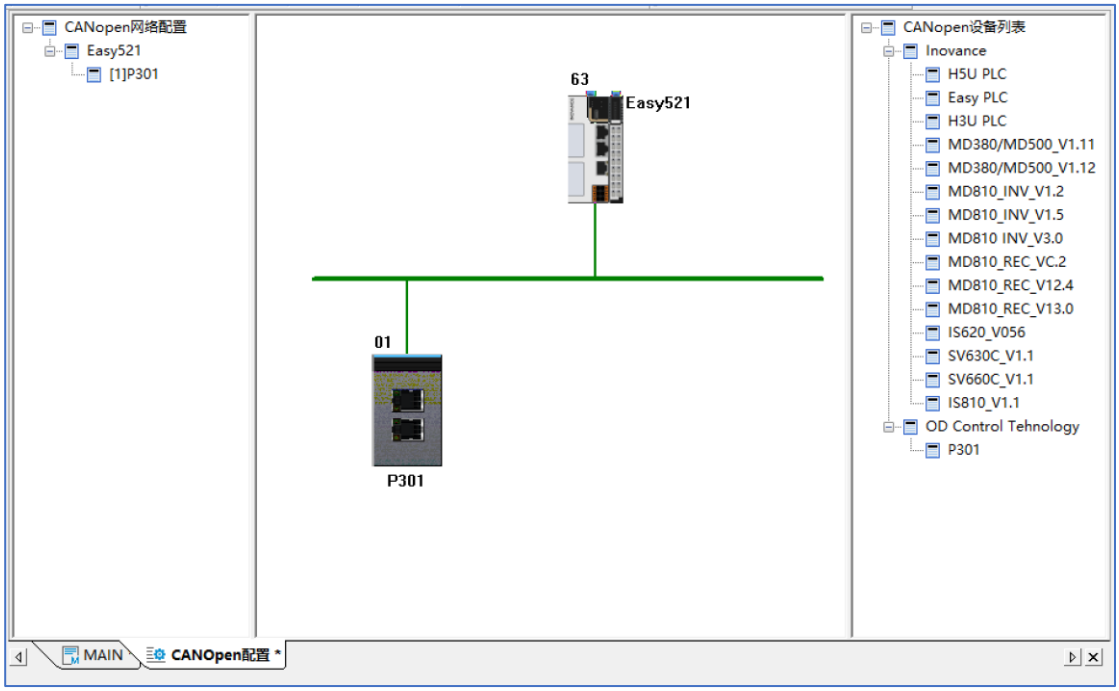

7.2.6 Configure Device Parameters

Select the device in the configuration box, right-click and choose "Configure Parameters" to open the device parameter configuration page.

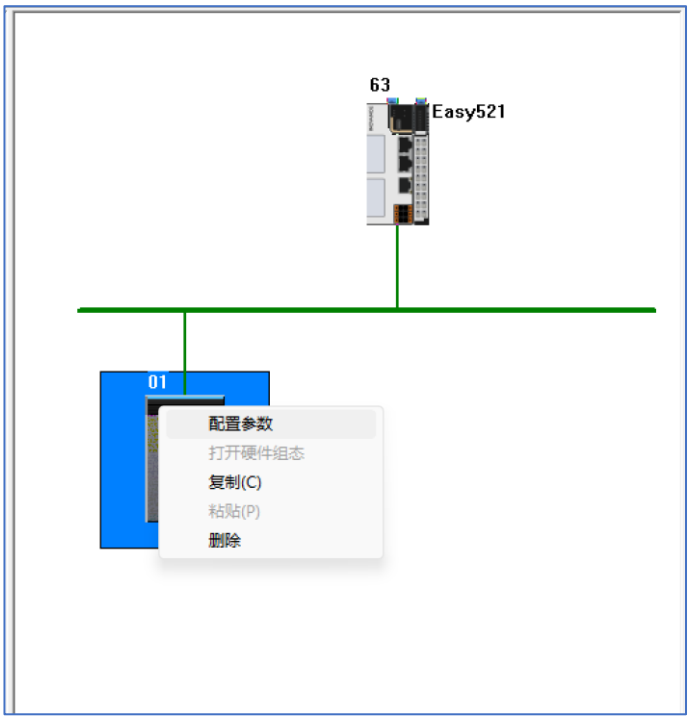

The configuration parameter page includes multiple tab pages for configuring the operating parameters of CAN devices.

On the slave node configuration page, it is necessary to set the node ID, which must be consistent with the actual configured ID of the P3xx device. After checking the "Enable Expert Settings" option, several PLC configuration items will be displayed. "Enable Heartbeat" is enabled by default, with the heartbeat production time set to 300ms and the heartbeat consumption attribute set to 2.5 times the production time. Users can configure node parameters as required.

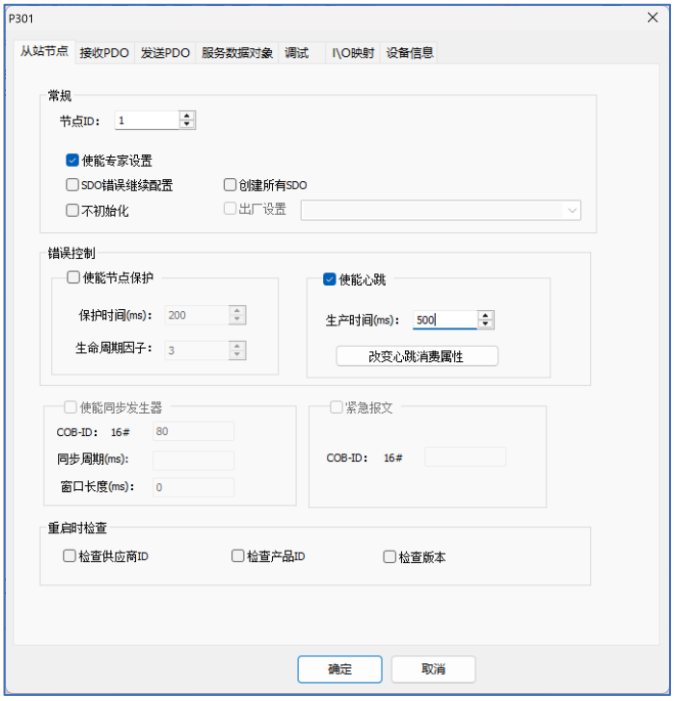

Enable the option to receive PDO1 and deselect PDO2 in PDO, set it as shown in the figure.

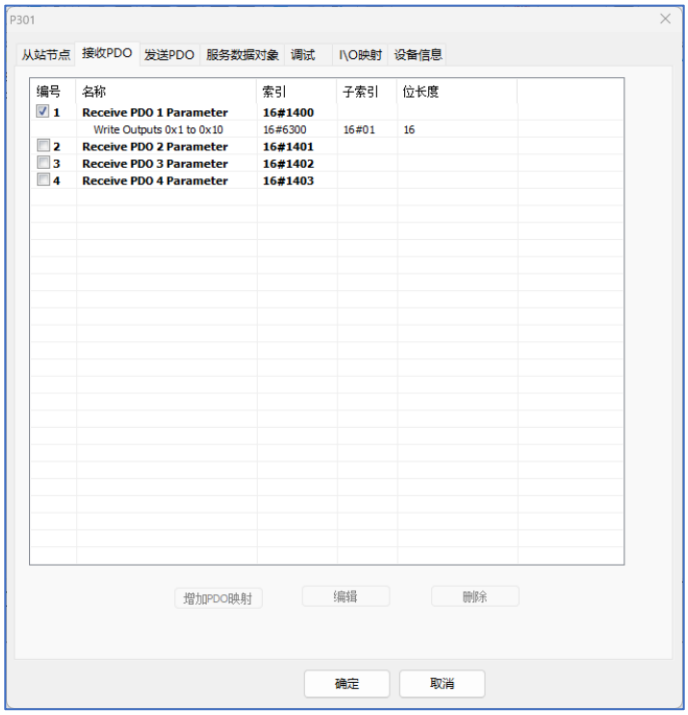

Check the option to send PDO1 and uncheck PDO2 in PDO transmission, configure the settings as shown in the figure.

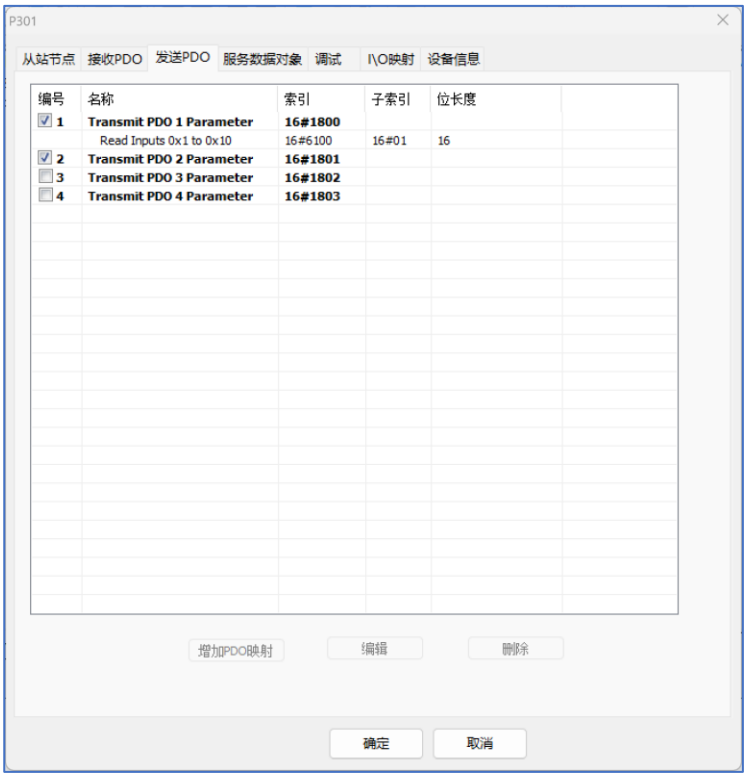

Users can view relevant information about slave stations in other tabs, such as data objects mapped by IOs.

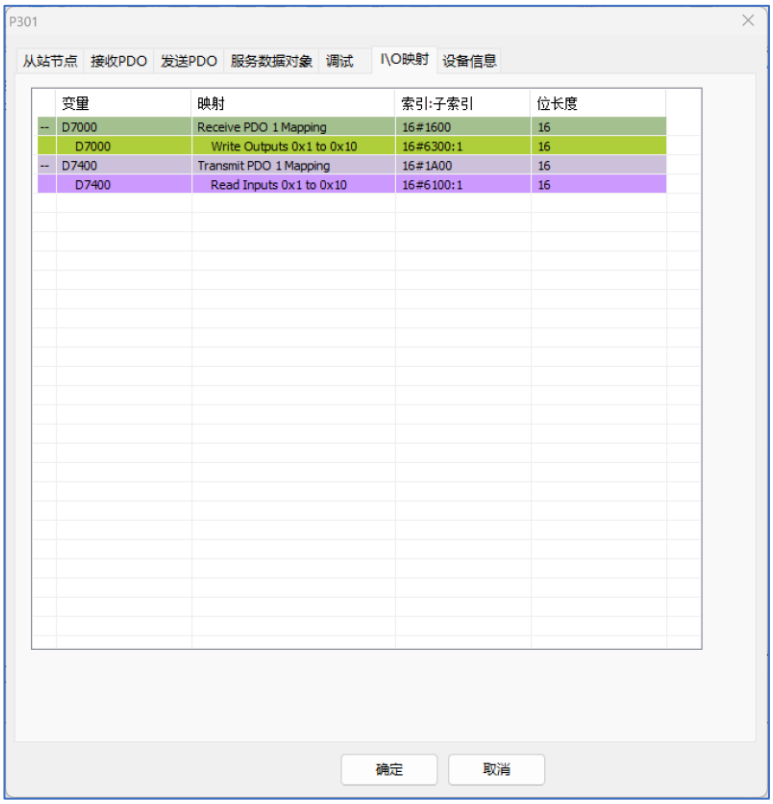

	变量	映射	索引:子索引	位长度
--	D7000	Receive PDO 1 Mapping	16#1600	16
	D7000	Write Outputs 0x1 to 0x10	16#6300:1	16
--	D7400	Transmit PDO 1 Mapping	16#1A00	16
	D7400	Read Inputs 0x1 to 0x10	16#6100:1	16

After enabling expert settings, you can add, delete or modify data objects on the Service Data Object tab page. These include operating parameters such as digital input filter parameters and analog input operating modes. These parameters will be written to the device before it enters the Operational state.

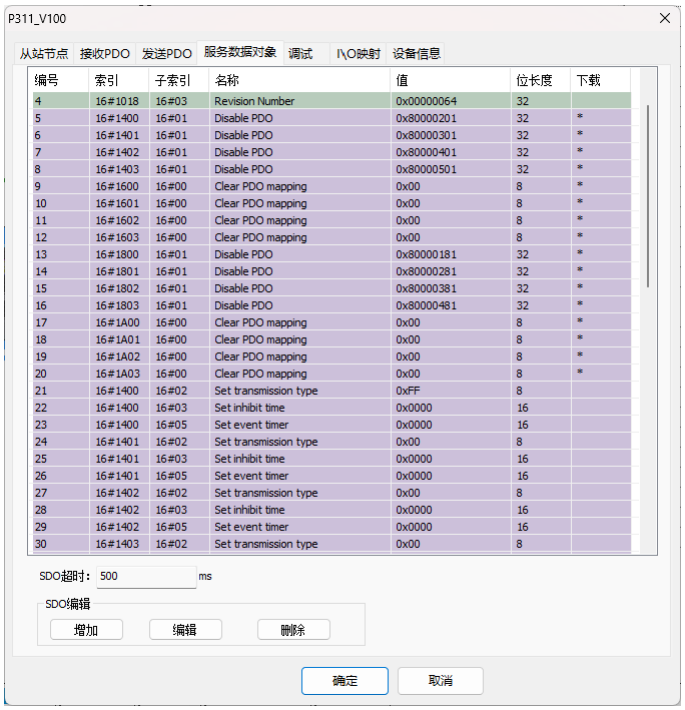

编号	索引	子索引	名称	值	位长度	下载
4	16#1018	16#03	Revision Number	0x00000064	32	
5	16#1400	16#01	Disable PDO	0x80000201	32	*
6	16#1401	16#01	Disable PDO	0x80000301	32	*
7	16#1402	16#01	Disable PDO	0x80000401	32	*
8	16#1403	16#01	Disable PDO	0x80000501	32	*
9	16#1600	16#00	Clear PDO mapping	0x00	8	*
10	16#1601	16#00	Clear PDO mapping	0x00	8	*
11	16#1602	16#00	Clear PDO mapping	0x00	8	*
12	16#1603	16#00	Clear PDO mapping	0x00	8	*
13	16#1800	16#01	Disable PDO	0x80000181	32	*
14	16#1801	16#01	Disable PDO	0x80000281	32	*
15	16#1802	16#01	Disable PDO	0x80000381	32	*
16	16#1803	16#01	Disable PDO	0x80000481	32	*
17	16#1A00	16#00	Clear PDO mapping	0x00	8	*
18	16#1A01	16#00	Clear PDO mapping	0x00	8	*
19	16#1A02	16#00	Clear PDO mapping	0x00	8	*
20	16#1A03	16#00	Clear PDO mapping	0x00	8	*
21	16#1400	16#02	Set transmission type	0xFF	8	
22	16#1400	16#03	Set inhibit time	0x0000	16	
23	16#1400	16#05	Set event timer	0x0000	16	
24	16#1401	16#02	Set transmission type	0x00	8	
25	16#1401	16#03	Set inhibit time	0x0000	16	
26	16#1401	16#05	Set event timer	0x0000	16	
27	16#1402	16#02	Set transmission type	0x00	8	
28	16#1402	16#03	Set inhibit time	0x0000	16	
29	16#1402	16#05	Set event timer	0x0000	16	
30	16#1403	16#02	Set transmission type	0x00	8	

Taking P311 as an example, illustrate the steps to configure the analog input working mode of the P311 module. Go to the “Service Data Object” tab, click the “Add” button in “SDO Edit” at the bottom left corner, select the “TransferMode” object on the pop-up page, enter the hexadecimal setting value in the bottom left

corner, and then click the “Confirm” button.。

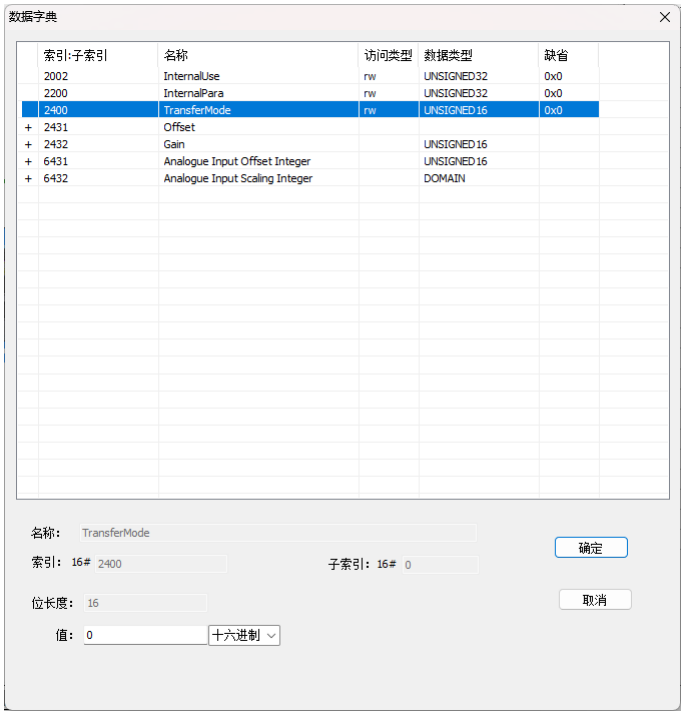

After clicking the "Confirm" button, the SDO object to be configured will be added to the service data object list. Users can delete or edit the selected objects on this page. Click the "Confirm" button to complete the addition or editing of service data objects.

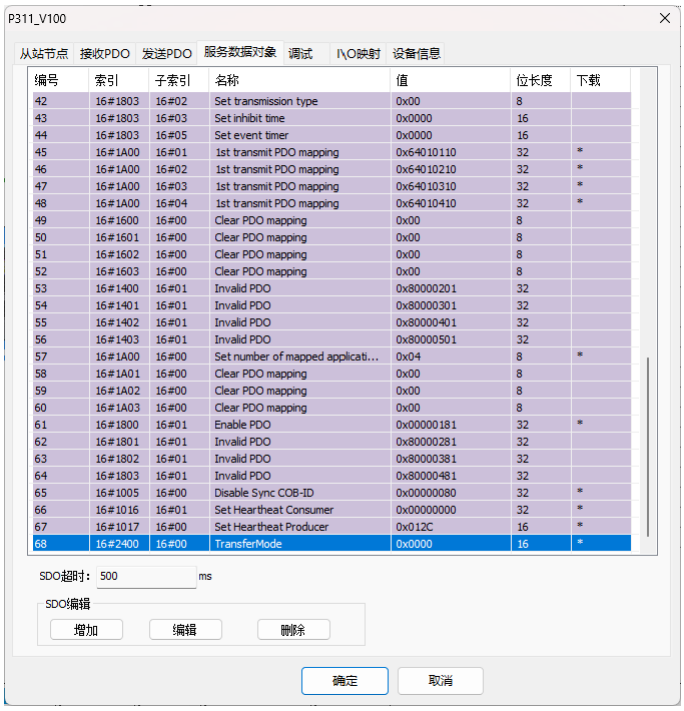

7.2.7 Master Configuration

You need to double-click the Easy521 master device in the CANopen network configuration device tree

on the left side of the configuration window. Here, heartbeat is used for monitoring between the master and slave stations, and uncheck the "Enable station monitoring" option.。

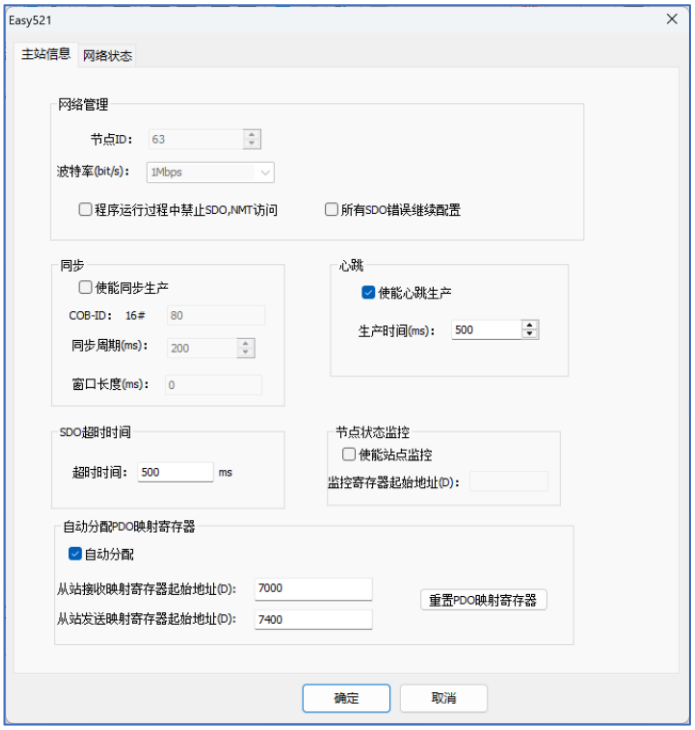

It can be found that the automatically allocated PDO mapping registers are consistent with those in the I/O mapping page. Modifications here will affect the I/O mapped registers. These registers will be used in user programs and are invoked in subsequent test codes. The settings are kept unchanged by default here.

In network monitoring, it is possible to connect to a PLC and monitor the operating status of master stations and CAN devices on the network. This function is mostly used to check network load status and troubleshoot anomalies.

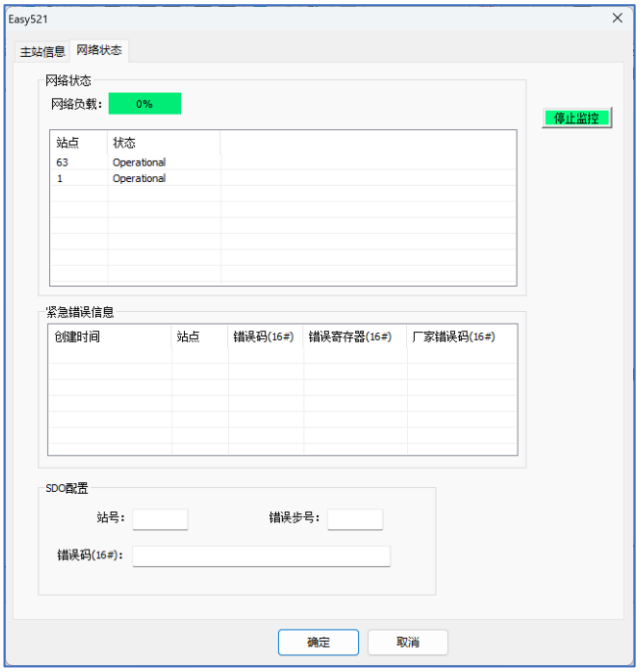

7.3 Test Routine

After completing the above configuration, write a test program. Use the communication data of the CAN device (PDO data D7000 and D7400), read the process data fed back by the CAN device, and then send it to the slave device.

```
1   //Simple test code below
2   //-------------------------------------
3   IF times < 100 THEN
4       times := times +1;
5       out0 := FALSE;
6       Y0 := FALSE;
7   ELSIF (times < 199) THEN
8       times := times +1;
9       out0 := TRUE;
10      Y0 := TRUE;
11  ELSE
12      D7000 := InputValue_u16;
13      times := 0;
14      Y1 := D7000.1;
15      Y2 := D7000.2;
16      Y3 := D7000.3;
17      Y4 := D7000.4;
18      Y5 := D7000.5;
19      Y6 := D7000.6;
20      Y7 := D7000.7;
21  END_IF;
22
23  InputValue_u16 := D7400;
24
25
26
```

MAIN | CANOpen配置

Compilation, download and operation. The P301 will be managed as a slave device by Easy521, and the sampling and configuration of its external interfaces will interact with the PLC.

8 Appendix

8.1 Troubleshooting of Common Issues

Q1: The ECP module fails to enter the OP state.

A: Troubleshoot and confirm hardware connection issues such as the network link indicator status mentioned in Q1.

Check whether the ECP device settings on the EtherCAT master side are consistent with the actual connected devices, including the order of expansion modules (following the ascending order of COP device IDs).

Verify whether an alias address is configured for the ECP device and if it matches the alias address setting in the EtherCAT master, and confirm that the alias address function is enabled on the master.

If the module connection configuration on the EtherCAT master matches the actual sequence and type of ECP modules, check the DIP switch settings of the COP module. BIT5 and BIT6 shall both be set to OFF; the module types corresponding to the ascending order of BIT1~BIT3 for ID configuration shall be consistent with the P3xx module types configured on the master side.

Check whether the COP module at the farthest end of the CAN network deployed with ECP modules has BIT7 set to ON, while all other COP modules in the same CAN network have BIT7 set to OFF.

Q2: The COP module extended by the ECP module cannot be recognized.

A: First troubleshoot the hardware connection status of the CAN network of the ECP module, ensure normal network connection and no fault in the network cable, so that the CAN RUN indicator light stays steady on after the ECP is powered on. If the problem still exists, check the DIP switch settings of the COP module. BIT5 shall be set to OFF, BIT6 to OFF, and there shall be no duplicate settings for BIT1 to BIT3 of the ID configuration.

Check whether BIT7 of the COP module arranged at the farthest end of the ECP module's CAN network is set to ON, while BIT7 of other COP modules in the same CAN network are set to OFF.

Q3: The EtherCAT ERR indicator light on the ECP module is flashing.

A: First, troubleshoot and confirm that the hardware connections of the ECP module and the COP module connected to its extended CAN interface are reliable.

Second, check whether the module connection settings configured on the EtherCAT master side are consistent with the actual sequence and type of ECP modules, which must be kept consistent; check the DIP switch settings of the COP module. BIT5 shall be set to OFF and BIT6 to OFF. The module types corresponding to BIT1~BIT3 set in ascending order for ID configuration shall be consistent with the P3xx module types configured on the master side.

Then, check whether the alias address configuration is enabled in the EtherCAT master. If this function is enabled, confirm that the alias address configuration matches the alias address configuration in the ECP module.

Q4: The LS indicator light on the ECP module is flashing.

A: The LS indicator light is used to indicate the operating status of the local bus of the ECP module. It will start flashing if a fault occurs in local bus communication. Therefore, when the LS indicator flashes, please check the baud rate setting DIP switches of all COP devices connected to the CAN network. Set BIT5 = OFF and BIT6 = OFF, and ensure no duplicate ID settings. For the terminal resistor setting of BIT7, only the COP at the farthest end shall be set to ON.

In addition, consideration should be given to the impact of external interference on the CAN network. Ensure the network cable is well shielded and the wiring is kept away from interference sources.

Q5: The ERR indicator of the CAN interface on the ECP module (or on the COP module) is flashing.

A: The ERR indicator of the CAN interface reflects the operating status of the CAN network. If it flashes, first check whether the physical connections of all COP devices connected to the CAN network are normal. After troubleshooting, check the baud rate settings on the DIP switches of each module, which shall be set to BIT5=OFF and BIT6=OFF, and confirm no duplicate ID settings. For the terminal resistor setting of BIT7, only the COP at the farthest end shall be set to ON.

In addition, consideration should be given to the external interference on the CAN network. Ensure the network cable is well shielded and the wiring is kept away from interference sources.

Q6: The COP module connected to the CAN bus cannot be recognized.

A: First, check whether the physical connections of all COP devices connected to the CAN network are normal. After troubleshooting, verify the baud rate settings on the DIP switches of each module. The set baud rate shall be consistent with that of the CAN master device (if there are other third-party CAN devices, their baud rates must also be set to the same value), and confirm there are no duplicate ID settings. For the terminal resistor setting BIT7, only the COP module at the farthest end shall be set to ON.

In addition, consideration should be given to the external interference of the CAN network. Ensure the network cable is well shielded and the wiring is kept away from interference sources.

8.2 Conversion Relationships of Temperature Units

In the application of temperature testing modules, the following three temperature units are commonly used, and their conversion relationships are as follows:

Temperature Units	Convert to degrees Celsius ℃	Convert to Fahrenheit℉	Convert to Kelvin K
Celsius °C	—	°F = °C × 9/5 + 32	K = °C + 273.15
Fahrenheit °F	°C = (°F − 32) × 5/9	—	K = (°F − 32) × 5/9 + 273.15
Kelvin K	°C = K − 273.15	°F = K × 9/5 − 459.67	—

Common Temperature Point:

- Freezing point of water: 0 ° C = 32 ° F = 273.15 K

- Boiling point of water: 100 ° C = 212 ° F = 373.15 K

- Absolute Zero: −273.15 °C = −459.67 °F = 0 K

8.3 CANopen Object Dictionary

The COP series modules are designed in compliance with the CANopen CiA401 protocol. During use, you can query the product's object dictionary. For more detailed information, please refer to the EDS file of each module.

Objects	Data Type	Read/Write	Parameter Description
0x1000:00	Unsigned32	RO	Device type, please refer to the definition of this object in the CiA401 protocol for details
0x1001:00	Unsigned8	RO	Error register, see the definition of this object in the CiA401 protocol for details
0x1003:00	Unsigned8	RO	Number of sub-indexes for the predefined error domain. Default value: 8
0x1003:1~8	Unsigned32	RO	Error codes for predefined error domains
0x1005:00	Unsigned32	RW	SYNC COB ID , Default value:0x80。
0x100C:00	Unsigned16	RW	Guard Time, Default value:0
0x100D:00	Unsigned8	RW	Life Time Factor, Default value:0
0x1016:01	Unsigned32	RW	Consumer Heartbeat Time. Unit: ms
0x1017:00	Unsigned16	RW	Producer Heartbeat Time. Unit: ms
0x1018:00	Unsigned8	RO	Number of device information sub-indexes, default value 4
0x1018:01	Unsigned32	RO	Vendor ID
0x1018:02	Unsigned32	RO	Product code
0x1018:03	Unsigned32	RO	Version number
0x1018:04	Unsigned32	RO	Serial number
0x1200:00	Unsigned8	RO	SDO server parameters
0x1200:01	Unsigned32	RO	Receive SDO COB ID from client to server. Usually, it is 0x600+ID.
0x1200:02	Unsigned32	RO	Send SDO COB ID from server to client. Usually, it is 0x580 + ID.
0x1400:00	Unsigned8	RO	Receive the number of sub-indexes of the PDO1 parameter object, default value: 5
0x1400:01	Unsigned32	RW	Receive the COB ID of PDO1
0x1400:02	Unsigned8	RW	Receive PDO1 transmission type
0x1400:03	Unsigned16	RW	Receive PDO1 Inhibit Time, Default: 0x0, Unit: 0.1ms
0x1400:04	Unsigned8	RW	Receive PDO1 Compatibility Entry

Objects	Data Type	Read/Write	Parameter Description
0x1400:05	Unsigned16	RW	Receive PDO1 event timer Event Time, unit: ms
0x1401:00	Unsigned8	RO	Receive the number of sub-indexes of the PDO2 parameter object, default value: 5
0x1401:01	Unsigned32	RW	Receive the COB ID of PDO2
0x1401:02	Unsigned8	RW	Receive PDO2 transmission type
0x1401:03	Unsigned16	RW	Receive PDO2 Inhibit Time, Default Value: 0x0, Unit: 0.1ms
0x1401:04	Unsigned8	RW	Receive PDO2 Compatibility Entry
0x1401:05	Unsigned16	RW	Receive the Event Time of the PDO2 event, unit: ms
0x1402:00	Unsigned8	RO	Receive the number of child indexes of the PDO3 parameter object, default value: 5
0x1402:01	Unsigned32	RW	Receive the COB ID of PDO3
0x1402:02	Unsigned8	RW	Receive PDO3 transmission type
0x1402:03	Unsigned16	RW	Receive PDO3 Inhibit Time, Default Value: 0x0, Unit: 0.1ms
0x1402:04	Unsigned8	RW	Receive PDO3 Compatibility Entry
0x1402:05	Unsigned16	RW	Receive the Event Time of the PDO3 event timer, unit: ms
0x1403:00	Unsigned8	RO	Receive the number of sub-indexes of the PDO4 parameter object, default value: 5
0x1403:01	Unsigned32	RW	Receive the COB ID of PDO4
0x1403:02	Unsigned8	RW	Receive PDO4 transmission type
0x1403:03	Unsigned16	RW	Receive PDO4 Inhibit Time, Default Value: 0x0, Unit: 0.1ms
0x1403:04	Unsigned8	RW	Receive PDO4 Compatibility Entry
0x1403:05	Unsigned16	RW	Receive the Event Time of the PDO4 event timer, unit: ms
0x1600:00	Unsigned8	RW	Receive the number of sub-indexes of PDO1 mapping parameters
0x1600:1~4	Unsigned32	RW	Receive PDO1 mapping parameters, and some modules support 8 sub-indexes.
0x1600:00	Unsigned8	RW	Receive the number of sub-indexes of PDO2 mapping parameters
0x1600:1~4	Unsigned32	RW	Receive PDO2 mapping parameters; some modules support 8 sub-indexes.
0x1600:00	Unsigned8	RW	Receive the number of sub-indices of PDO3 mapping parameters
0x1600:1~4	Unsigned32	RW	Receive PDO3 mapping parameters; some modules support 8 sub-indexes.
0x1600:00	Unsigned8	RW	Receive the number of sub-indexes of PDO4 mapping parameters
0x1600:1~4	Unsigned32	RW	Receive PDO4 mapping parameters; some modules support 8 sub-indexes.
0x1800:00	Unsigned8	RO	Send the number of sub-indexes of the PDO1 parameter object, default value: 5
0x1800:01	Unsigned32	RW	Send the COB ID of PDO1
0x1800:02	Unsigned8	RW	Send PDO1 transmission type, default value: 254
0x1800:03	Unsigned16	RW	Send PDO1 Inhibit Time, Default Value: 0x0, Unit: 0.1ms
0x1800:04	Unsigned8	RW	Send PDO1 Compatibility Entry
0x1800:05	Unsigned16	RW	Send PDO1 event time, unit: ms
0x1801:00	Unsigned8	RO	Send the number of sub-indexes of the PDO2 parameter object,

Objects	Data Type	Read/Write	Parameter Description
			default value: 5
0x1801:01	Unsigned32	RW	Send the COB ID of PDO2
0x1801:02	Unsigned8	RW	Send PDO2 transmission type, default value: 254
0x1801:03	Unsigned16	RW	Send PDO2 Inhibit Time, Default Value: 0x0, Unit: 0.1ms
0x1801:04	Unsigned8	RW	Send PDO2 Compatibility Entry
0x1801:05	Unsigned16	RW	Send PDO2 event time, unit: ms
0x1802:00	Unsigned8	RO	Send the number of sub-indexes of the PDO3 parameter object, default value: 5
0x1802:01	Unsigned32	RW	Send the COB ID of PDO3
0x1802:02	Unsigned8	RW	Send PDO3 transmission type, default value: 254
0x1802:03	Unsigned16	RW	Send PDO3 Inhibit Time, Default Value: 0x0, Unit: 0.1ms
0x1802:04	Unsigned8	RW	Send PDO3 Compatibility Entry
0x1802:05	Unsigned16	RW	Send PDO3 event time, unit: ms
0x1803:00	Unsigned8	RO	Send the number of sub-indexes of the PDO4 parameter object, default value: 5
0x1803:01	Unsigned32	RW	Send the COB ID of PDO4
0x1803:02	Unsigned8	RW	Send PDO4 transmission type, default value: 254
0x1803:03	Unsigned16	RW	Send PDO4 Inhibit Time, Default Value: 0x0, Unit: 0.1ms
0x1803:04	Unsigned8	RW	Send PDO4 Compatibility Entry
0x1803:05	Unsigned16	RW	Send PDO4 event time, unit: ms
0x1A00:00	Unsigned8	RW	Send the number of sub-indices of PDO1 mapping parameters
0x1A00:1~4	Unsigned32	RW	Send PDO1 mapping parameters, some modules support 8 sub-indexes.
0x1A00:00	Unsigned8	RW	Send the number of sub-indexes of PDO2 mapping parameters
0x1A00:1~4	Unsigned32	RW	Send PDO2 mapping parameters, some modules support 8 sub-indexes.
0x1A00:00	Unsigned8	RW	Send the number of sub-indices of PDO3 mapping parameters
0x1A00:1~4	Unsigned32	RW	Send PDO3 mapping parameters, some modules support 8 sub-indexes
0x1A00:00	Unsigned8	RW	Send the number of sub-indices of PDO4 mapping parameters
0x1A00:1~4	Unsigned32	RW	Send PDO4 mapping parameters, some modules support 8 sub-indexes.

The table above shows the object dictionary shared by all modules, which differ from each other in initial value definitions, such as device type and PDO mapping parameters. For details, please refer to the device's EDS file.

8.3.1 P301/P302 Object Dictionary

Objects	Data Type	Read/Write	Parameter Description
0x6100:01	Unsigned16	RO	Digital input signal sampling value
0x6102:01	Unsigned16	RW	Polarity inversion of digital input signal. Default 0: No inversion, 1: Inversion
0x6103:01	Unsigned16	RW	Digital input filter enable. Default 0: disable, 1: enable filtering

Objects	Data Type	Read/Write	Parameter Description
0x6302:01	Unsigned16	RW	Polarity inversion of digital output signal. Default 0: no inversion, 1: inversion
0x6306:01	Unsigned16	RW	Output mode upon exception. Defaults to 0xFFFF, and outputs using the value defined in 0x6307:01. When a bit value is 0, the corresponding bit retains its current output state.
0x6307:01	Unsigned16	RW	Digital output value used when the output mode (0x6306:01) is set to 1 in case of an exception. The default value is 0.
0x6308:01	Unsigned16	RW	Output port mask setting, default value is 0xFFFF, which means no output bits are masked; when the bit value is 0, the corresponding digital output bit will be masked.

Default PDO configuration: The received PDO byte count is 0; Transmit PDO1 carries 2-byte digital input signal sampling values, corresponding to the value of object 0x6100:01, with the transmission mode set to 254.

8.3.2 P303 Object Dictionary

Objects	Data Type	Read/Write	Parameter Description
0x6102:01	Unsigned32	RO	Sampled Value of Digital Input Signal
0x6122:01	Unsigned32	RW	Polarity inversion of digital input signal. Default 0: No inversion, 1: Inversion
0x6123:01	Unsigned32	RW	Digital input filter enable. Default 0: Disable, 1: Enable filtering

Default PDO configuration: The received PDO byte count is 0; transmitted PDO1 is a 4-byte digital input signal sampling value, corresponding to the value of object 0x6102:01, with the transmission mode set to 254.

8.3.3 P305/P306 Object Dictionary

Objects	Data Type	Read/Write	Parameter Description
0x6320:01	Unsigned32	RW	Digital output signal set value
0x6322:01	Unsigned32	RW	Polarity inversion of digital output signal. Default 0: no inversion, 1: inversion
0x6326:01	Unsigned32	RW	Output mode upon exception. The default value is 0xFFFFFFFF, and output is performed using the value defined in 0x6307:01. When a bit value is 0, the corresponding bit retains its current output state.
0x6327:01	Unsigned32	RW	Digital output value used when the output mode (0x6326:01) is set to 1 upon exception. The default value is 0.
0x6328:01	Unsigned32	RW	Output port masking configuration, default value is 0xFFFFFFFF, with no output bits masked; when the bit value is 0, the corresponding digital output bit will be masked.

Default PDO configuration: The received PDO byte count is 2 bytes, which is the setting value of object 0x6320:01. The transmitted PDO byte count is 0.

8.3.4 P307/P308 Object Dictionary

Objects	Data Type	Read/Write	Parameter Description
0x6000:01	Unsigned8	RO	Sampling value of digital input signal DI0~7
0x6000:02	Unsigned8	RO	Sampling value of digital input signal DI8~F
0x6000:03	Unsigned8	RO	Sampling value of digital input signal DI10~17
0x6002:01	Unsigned8	RW	Polarity inversion for digital input signals 0x0~0x7. Default 0: no inversion, 1: inversion
0x6002:02	Unsigned8	RW	Polarity inversion for digital input signals 0x8~0xF. Default 0: no inversion, 1: inversion
0x6002:03	Unsigned8	RW	Polarity inversion for digital input signals 0x10~0x17. Default 0: no inversion, 1: inversion
0x6003:01	Unsigned8	RW	Filter enable for digital input signals 0x0~0x7. Default 0: disabled, 1: filter enabled
0x6003:02	Unsigned8	RW	Filter enable for digital input signals 0x8~0xF. Default 0: disabled, 1: filter enabled.
0x6003:03	Unsigned8	RW	Filter enable for digital input signals 0x10~0x17. Default 0: disabled, 1: filter enabled
0x6200:01	Unsigned8	RW	Setting value of digital output signal DO0~7
0x6202:01	Unsigned8	RW	Polarity inversion of digital output signals 0x0~0x7. Default 0: no inversion, 1: inversion
0x6206:01	Unsigned8	RW	Output mode upon exception. Defaults to 0xFF, and outputs using the value defined in 0x6207:01. When a bit value is 0, the corresponding bit retains its current output state.
0x6207:01	Unsigned8	RW	Digital output value used when the abnormal output mode (0x6206:01) is set to 1.
0x6208	Unsigned8	RW	Output port masking setting, default value is 0xFF, with no output bits masked; when the bit value is 0, the corresponding digital output bit will be masked.

Default PDO configuration: The received PDO1 data length is 1 byte, corresponding to the value of object 0x6200:01. Transmit PDO1 consists of 3-byte digital input signal sampling values, corresponding to the values of objects 0x6102:01~03, with the transmission mode set to 254.

8.3.5 P309 Object Dictionary

Objects	Data Type	Read/Write	Parameter Description
0x6200:01	Unsigned8	RW	Setting value of digital output signals DO0~7
0x6202:01	Unsigned8	RW	Polarity inversion of digital output signal. Default 0: no inversion, 1: inversion
0x6206:01	Unsigned8	RW	Output mode upon exception. Defaults to 0xFF, output with the value defined in 0x62307:01. When a bit value is 0, the corresponding bit maintains its current output state.
0x6207:01	Unsigned16	RW	Digital output value used when the abnormal output mode (0x6206:01) is set to 1.

Objects	Data Type	Read/Write	Parameter Description
0x6208:01	Unsigned16	RW	Output port mask configuration, default value is 0xFF, with no output bits masked; when the bit value is 0, the corresponding digital output bit will be masked.

Default PDO configuration: The received PDO1 byte count is 1, corresponding to the value of object 0x6200:01. Transmit PDO1 has 0 bytes.

8.3.6 P311 Object Dictionary

Objects	Data Type	Read/Write	Parameter Description
0x2400:00	Unsigned16	RW	Set the signal type of analog input channels, with every 4 bits corresponding to one channel. The default value is 0 for all channels, which represents a voltage signal input ranging from -10V to +10V.
0x2431:01	INTEGER16	RW	Zero input deviation of analog input channel 0, default value is 0. The setting value ranges from -1600 to 1600.
0x2431:02	INTEGER16	RW	Zero input deviation of analog input channel 1, default value is 0. The setting value ranges from -1600 to 1600.
0x2431:03	INTEGER16	RW	Zero input deviation of analog input channel 2, default value is 0. The setting value ranges from -1600 to 1600.
0x2431:04	INTEGER16	RW	Zero input deviation of analog input channel 3, default value is 0. The setting value ranges from -1600 to 1600.
0x2432:01	Unsigned16	RW	Gain compensation coefficient for analog input channel 0, with a default value of 30000. When the set value is x, the sampled value of the input signal will be multiplied by x/30000.
0x2432:02	Unsigned16	RW	Gain compensation coefficient for analog input channel 1, with a default value of 30000. When the set value is x, the sampled value of the input signal will be multiplied by x/30000.
0x2432:03	Unsigned16	RW	Gain compensation coefficient for analog input channel 2, with a default value of 30000. When the set value is x, the sampled value of the input signal will be multiplied by x/30000.
0x2432:04	Unsigned16	RW	Gain compensation coefficient for analog input channel 3, with a default value of 30000. When the set value is x, the sampled value of the input signal will be multiplied by x/30000.
0x6401:01	INTEGER32	RO	Sampling value of input channel 0.
0x6401:02	INTEGER32	RO	Sampling value of input channel 1.
0x6401:03	INTEGER32	RO	Sampling value of input channel 2.
0x6401:04	INTEGER32	RO	Sampling value of input channel 3.
0x6431:01	INTEGER32	RW	The zero-level offset value of input channel 0.
0x6431:02	INTEGER32	RW	The zero-level offset value of input channel 1.
0x6431:03	INTEGER32	RW	The zero-level offset value of input channel 2.
0x6431:04	INTEGER32	RW	The zero-level offset value of input channel 3.
0x6432:01	INTEGER32	RW	Gain compensation coefficient of input channel 0. The default value is 100000. When the set value is x, the sampled value of the

Objects	Data Type	Read/Write	Parameter Description
			input signal will be multiplied by x/100000.
0x6432:02	INTEGER32	RW	Gain compensation coefficient of input channel 1. The default value is 100000. When the set value is x, the sampled value of the input signal will be multiplied by x/100000.
0x6432:03	INTEGER32	RW	Gain compensation coefficient of input channel 2. The default value is 100000. When the set value is x, the sampled value of the input signal will be multiplied by x/100000.
0x6432:04	INTEGER32	RW	Gain compensation coefficient of input channel 3. The default value is 100000. When the set value is x, the sampled value of the input signal will be multiplied by x/100000.

Default PDO configuration: The received byte count of PDO1 is 0. The transmitted PDO1 is an 8-byte sampled value of 4-channel analog input signals, corresponding to the values of object 0x6401:01~04, with a transmission mode of 254.

8.3.7 P312 Object Dictionary

Objects	Data Type	Read/Write	Parameter Description
0x2400:00	Unsigned16	RW	Set the signal type of the analog output channel, with every 4 bits corresponding to one channel. The default value is 0 for all channels, which represents a voltage signal input ranging from -10V to +10V.
0x2431:01	INTEGER16	RW	Zero input deviation of analog output channel 0, default value is 0. The setting value ranges from -1600 to 1600.
0x2431:02	INTEGER16	RW	Zero input deviation of analog output channel 1, default value is 0. The setting value ranges from -1600 to 1600.
0x2431:03	INTEGER16	RW	Zero input deviation of analog output channel 2, default value is 0. The setting value ranges from -1600 to 1600.
0x2431:04	INTEGER16	RW	Zero input deviation of analog output channel 3, default value is 0. The setting value ranges from -1600 to 1600.
0x2432:01	Unsigned16	RW	Gain compensation coefficient of analog output channel 0, with a default value of 30000. When the set value is x, the set value of the output signal will be multiplied by x/30000.
0x2432:02	Unsigned16	RW	Gain compensation coefficient for analog output channel 1, with a default value of 30000. When the set value is x, the output signal set value will be multiplied by x/30000.
0x2432:03	Unsigned16	RW	Gain compensation coefficient for analog output channel 2, with a default value of 30000. When the set value is x, the output signal set value will be multiplied by x/30000.
0x2432:04	Unsigned16	RW	Gain compensation coefficient of analog output channel 3, with a default value of 30000. When the set value is x, the output signal set value will be multiplied by x/30000.
0x6411:01	INTEGER16	RW	Set value of analog output channel 0.
0x6411:02	INTEGER16	RW	Set value of analog output channel 1.
0x6411:03	INTEGER16	RW	Set value of analog output channel 2.

Objects	Data Type	Read/Write	Parameter Description
0x6411:04	INTEGER16	RW	Set value of analog output channel 3.
0x6443:01	Unsigned8	RW	The default value is 1. When the module is abnormal or exits OP, channel 0 outputs the setting value of 0x6444:01. When set to 0, the current output is maintained upon module abnormality or OP exit.
0x6443:02	Unsigned8	RW	The default value is 1. When the module is abnormal or exits OP, channel 1 outputs the set value of 0x6444:02. When set to 0, the current output is maintained upon module abnormality or OP exit.
0x6443:03	Unsigned8	RW	The default value is 1. When the module is abnormal or exits OP, Channel 2 outputs the setting value of 0x6444:03. When set to 0, it maintains the current output upon module abnormality or OP exit.
0x6443:04	Unsigned8	RW	The default value is 1. When the module is abnormal or exits OP, channel 3 outputs the setting value of 0x6444:04. When set to 0, the current output is maintained upon module abnormality or OP exit.
0x6444:01	INTEGER32	RW	When the value of object 0x6443:01 is 1, the output value of channel 0 upon module abnormality or OP exit.
0x6444:02	INTEGER32	RW	When the value of object 0x6443:02 is 1, the output value of Channel 1 upon module abnormality or OP exit.
0x6444:03	INTEGER32	RW	When the value of object 0x6443:03 is 1, the output value of Channel 2 upon module abnormality or OP exit.
0x6444:04	INTEGER32	RW	When the value of object 0x6443:04 is 1, the output value of channel 3 upon module abnormality or OP exit

Default PDO configuration: The received PDO byte length is 8, corresponding to 4-channel analog output. The transmitted PDO byte length is 0.

8.3.8 P315 Object Dictionary

Objects	Data Type	Read/Write	Parameter Description
0x2003:01	INTEGER32	RO	ADC sampling value of RTD0.
0x2003:02	INTEGER32	RO	ADC sampling value of RTD1.
0x2003:03	INTEGER32	RO	ADC sampling value of RTD2.
0x2003:04	INTEGER32	RO	ADC sampling value of RTD3.
0x2004:01	INTEGER16	RW	Upper temperature alarm limit for Channel 0. The upper limit must be greater than the lower limit to enable the alarm detection function.
0x2004:02	INTEGER16	RW	Lower limit of temperature alarm for Channel 0.
0x2004:03	INTEGER16	RW	Channel 1 temperature alarm upper limit. The upper limit must be greater than the lower limit to enable the alarm detection function.
0x2004:04	INTEGER16	RW	Lower limit value of temperature alarm for Channel 1.
0x2004:05	INTEGER16	RW	Upper limit value of temperature alarm for Channel 2. The upper limit must be greater than the lower limit to enable the alarm detection function.
0x2004:06	INTEGER16	RW	Channel 2 temperature alarm lower limit.
0x2004:07	INTEGER16	RW	Upper limit value of temperature alarm for Channel 3. The upper limit must be greater than the lower limit to enable the alarm detection

Objects	Data Type	Read/Write	Parameter Description
			function.
0x2004:08	INTEGER16	RW	Channel 3 temperature alarm lower limit value.
0x2005:00	Unsigned16	RW	Enable the temperature upper and lower limit alarm detection function. Bits BIT0~3 correspond to enabling the temperature upper and lower limit detection function of RTD0~3 respectively. When a bit is set to 0, the corresponding RTD channel disables the temperature upper and lower limit alarm detection.
0x2006:01	INTEGER16	RW	Temperature deviation value of Channel 0.
0x2006:02	INTEGER16	RW	Temperature deviation value of Channel 1.
0x2006:03	INTEGER16	RW	Temperature deviation value of Channel 2.
0x2006:04	INTEGER16	RW	Temperature deviation value of Channel 3.
0x2007:00	Unsigned8	RW	Filtering level setting, setting range: 0~9, default value: 2.
0x2008:00	Unsigned16	RW	RTD temperature sensor type. Each 4 bits from low to high are used to set the sensor type of RTD channels 0~3.
0x2009:00	Unsigned16	RW	RTD temperature sampling time setting, default value is 0, corresponding to a sampling period of 250ms.
0x200A:01	Unsigned16	RO	Operating status of RTD0.
0x200A:02	Unsigned16	RO	Operating status of RTD1.
0x200A:03	Unsigned16	RO	Operating status of RTD2.
0x200A:04	Unsigned16	RO	Operating status of RTD3.
0x200B:00	Unsigned16	RW	The sampling of each RTD temperature channel is used for target temperature unit configuration. The default value is 0, with the unit being °C, and the setting range is 0 to 2.
0x2431:01	INTEGER16	RW	Temperature offset value of Channel 0.
0x2431:02	INTEGER16	RW	Temperature offset value of Channel 1.
0x2431:03	INTEGER16	RW	Temperature offset value of Channel 2.
0x2431:04	INTEGER16	RW	Temperature offset value of Channel 3.
0x2432:01	INTEGER16	RW	Gain calibration temperature points are 0/1/2/3. Users can set the four calibration points to be arranged in ascending order. All channels use them.
0x2432:02	INTEGER16	RW	
0x2432:03	INTEGER16	RW	
0x2432:04	INTEGER16	RW	
0x2433:01	Unsigned16	RW	Channel 0 temperature gain compensation values are 0/1/2/3, corresponding to the calibration coefficients of temperature calibration points 0/1/2/3. The default value is 30000, and when the set value is x, the output signal setting value will be multiplied by x/30000.
0x2433:02	Unsigned16	RW	
0x2433:03	Unsigned16	RW	
0x2433:04	Unsigned16	RW	
0x2434:01	Unsigned16	RW	Channel 1 temperature gain compensation values of 0/1/2/3, corresponding to the calibration coefficients of 0/1/2/3 temperature calibration points. The default value is 30000, and when the set value is x, the output signal setting value will be multiplied by x/30000.
0x2434:02	Unsigned16	RW	
0x2434:03	Unsigned16	RW	
0x2434:04	Unsigned16	RW	
0x2435:01	Unsigned16	RW	Channel 2 temperature gain compensation values are 0/1/2/3, corresponding to the calibration coefficients of 0/1/2/3 temperature calibration points. The default value is 30000, and when the set value is
0x2435:02	Unsigned16	RW	
0x2435:03	Unsigned16	RW	

Objects	Data Type	Read/Write	Parameter Description
0x2435:04	Unsigned16	RW	x, the output signal setting value will be multiplied by x/30000.
0x2436:01	Unsigned16	RW	Channel 3 temperature gain compensation values of 0/1/2/3, corresponding to the calibration coefficients of temperature calibration points 0/1/2/3. The default value is 30000, and when the set value is x, the output signal setting value will be multiplied by x/30000.
0x2436:02	Unsigned16	RW	
0x2436:03	Unsigned16	RW	
0x2436:04	Unsigned16	RW	
0x6401:01	INTEGER16	RO	The temperature value sampled by RTD0, unit: 0.1℃.
0x6401:02	INTEGER16	RO	The temperature value sampled by RTD1, unit: 0.1℃.
0x6401:03	INTEGER16	RO	The temperature value sampled by RTD2, unit: 0.1℃.
0x6401:04	INTEGER16	RO	The temperature value sampled by RTD3, unit: 0.1℃.

Default PDO configuration: The received byte count of PDO1 is 0. PDO1 transmits 4-channel RTD sampled temperature values with 8 bytes, corresponding to the values of object 0x6401:01~04, and the transmission mode is 254.

8.3.9 P316 Object Dictionary

Objects	Data Type	Read/Write	Parameter Description
0x2003:01	INTEGER32	RO	ADC sampling value of TC0
0x2003:02	INTEGER32	RO	ADC sampling value of TC1
0x2003:03	INTEGER32	RO	ADC sampling value of TC2
0x2003:04	INTEGER32	RO	ADC sampling value of TC3
0x2003:05	INTEGER32	RO	ADC sampling value for cold junction temperature compensation.
0x2004:01	INTEGER16	RW	Upper temperature alarm limit for Channel 0. The upper limit must be greater than the lower limit to enable the alarm detection function.
0x2004:02	INTEGER16	RW	Lower limit of temperature alarm for Channel 0.
0x2004:03	INTEGER16	RW	Channel 1 temperature alarm upper limit. The upper limit must be greater than the lower limit to enable the alarm detection function.
0x2004:04	INTEGER16	RW	Lower limit value of temperature alarm for Channel 1.
0x2004:05	INTEGER16	RW	Upper limit value of temperature alarm for Channel 2. The upper limit must be greater than the lower limit to enable the alarm detection function.
0x2004:06	INTEGER16	RW	Channel 2 temperature alarm lower limit.
0x2004:07	INTEGER16	RW	Upper limit value of temperature alarm for Channel 3. The upper limit must be greater than the lower limit to enable the alarm detection function.
0x2004:08	INTEGER16	RW	Channel 3 temperature alarm lower limit value.
0x2005:00	Unsigned16	RW	Enable the temperature upper and lower limit alarm detection function. Bits BIT0~5 correspond to enabling the upper and lower limit temperature detection functions of TC0~3. When the bit is set to 0, the temperature upper and lower limit alarm detection of the corresponding RTD channel is disabled.
0x2006:01	INTEGER16	RW	Channel 0 temperature bias value
0x2006:02	INTEGER16	RW	Channel 1 temperature bias value
0x2006:03	INTEGER16	RW	Channel 2 temperature bias value

Objects	Data Type	Read/Write	Parameter Description
0x2006:04	INTEGER16	RW	Channel 3 temperature bias value
0x2006:05	INTEGER16	RW	Temperature deviation value of the cold junction temperature compensation channel.
0x2007:00	Unsigned8	RW	Filtering level setting, setting range: 0~9, default value: 2.
0x2008:00	Unsigned32	RW	Temperature sensor type. Every 4 bits from the low bit to the high bit are used to configure the sensor types for TC channels 0~5 and cold junction compensation.
0x2009:00	Unsigned16	RW	TC temperature sampling time setting, default value is 0, corresponding to a 250ms sampling period.
0x200A:01	Unsigned16	RO	Working status of TC0
0x200A:02	Unsigned16	RO	Working status of TC1
0x200A:03	Unsigned16	RO	Working status of TC2
0x200A:04	Unsigned16	RO	Working status of TC3
0x200A:05	Unsigned16	RO	Working status of the cold junction compensation channel.
0x200B:00	Unsigned16	RW	The sampling of each TC temperature channel is used for target temperature unit configuration. The default value is 0, with the unit being °C, and the setting range is 0 to 2. It occupies 2 bits per channel.
0x2431:01	INTEGER16	RW	Channel 0 temperature offset value.
0x2431:02	INTEGER16	RW	Channel 1 temperature offset value.
0x2431:03	INTEGER16	RW	Channel 2 temperature offset value.
0x2431:04	INTEGER16	RW	Channel 3 temperature offset value.
0x2431:05	INTEGER16	RW	Cold junction compensation channel temperature offset value.
0x2432:01	INTEGER16	RW	Gain calibration temperature points are 0/1/2/3. Users can set the four calibration points to be arranged in ascending order. All channels use them.
0x2432:02	INTEGER16	RW	
0x2432:03	INTEGER16	RW	
0x2432:04	INTEGER16	RW	
0x2433:01	Unsigned16	RW	Channel 0 temperature gain compensation values are 0/1/2/3, corresponding to the calibration coefficients of temperature calibration points 0/1/2/3. The default value is 30000, and when the set value is x, the output signal setting value will be multiplied by x/30000.
0x2433:02	Unsigned16	RW	
0x2433:03	Unsigned16	RW	
0x2433:04	Unsigned16	RW	
0x2434:01	Unsigned16	RW	Channel 1 temperature gain compensation values of 0/1/2/3, corresponding to the calibration coefficients of 0/1/2/3 temperature calibration points. The default value is 30000, and when the set value is x, the output signal setting value will be multiplied by x/30000.
0x2434:02	Unsigned16	RW	
0x2434:03	Unsigned16	RW	
0x2434:04	Unsigned16	RW	
0x2435:01	Unsigned16	RW	Channel 2 temperature gain compensation values are 0/1/2/3, corresponding to the calibration coefficients of 0/1/2/3 temperature calibration points. The default value is 30000, and when the set value is x, the output signal setting value will be multiplied by x/30000.
0x2435:02	Unsigned16	RW	
0x2435:03	Unsigned16	RW	
0x2435:04	Unsigned16	RW	
0x2436:01	Unsigned16	RW	Channel 3 temperature gain compensation values of 0/1/2/3, corresponding to the calibration coefficients of temperature calibration points 0/1/2/3. The default value is 30000, and when the set value is x, the output signal setting value will be multiplied by x/30000.
0x2436:02	Unsigned16	RW	
0x2436:03	Unsigned16	RW	
0x2436:04	Unsigned16	RW	

Objects	Data Type	Read/Write	Parameter Description
0x243701	Unsigned16	RW	The temperature gain compensation value of the cold junction temperature compensation channel is 0/1/2/3, corresponding to the calibration coefficient of 0/1/2/3 at the temperature calibration point. The default value is 30000, and when the set value is x, the output signal setting value will be multiplied by x/30000.
0x2437:02	Unsigned16	RW	
0x2437:03	Unsigned16	RW	
0x2437:04	Unsigned16	RW	
0x6401:01	INTEGER16	RO	Temperature value sampled by TC0, unit: 0.1℃.
0x6401:02	INTEGER16	RO	Temperature value sampled by TC1, unit: 0.1℃.
0x6401:03	INTEGER16	RO	Temperature value sampled by TC2, unit: 0.1℃.
0x6401:04	INTEGER16	RO	Temperature value sampled by TC3, unit: 0.1℃.
0x6401:05	INTEGER16	RO	Temperature value sampled by the cold junction temperature compensation channel, unit: 0.1℃.

Default PDO Configuration: The received byte count of PDO1 is 0. Transmit PDO1 contains 4 thermocouple sampling temperature values (i.e., 0x6401:01~04), totaling 8 bytes; Transmit PDO2 includes the cold junction temperature compensation value (i.e., 0x6401: 05) and the status words of each temperature sampling channel, with 5 bytes (i.e., 0x200A:01~05) occupying a total of 7 bytes, and the transmission mode is 254.

8.4 Firmware Updating

For the firmware upgrade of COP series modules, please refer to the chapter about firmware upgrade in the user manual of ECP series modules.