HK295S39CL-800

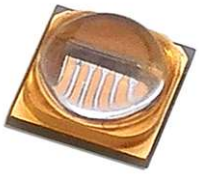

Specification Datasheet

CFCL Optoelectronics (Shenzhen) Co., Ltd.

Model No.: HK295S39CL-800

Product: 3939 Round Lens Package UVC LED (40*40mil Chip)

Revision: V1.0

Date: October 2026

Table of Contents

No.	Item	Page
1	General Description	2
2	Key Features	2
3	Application Fields	2
4	Absolute Maximum Ratings	3
5	Electro-Optical Characteristics	3
6	Binning Specifications	4
7	Outline Dimensions	4、5
8	Packaging & Storage	5
9	Notes & Precautions	5

Address: 6th Floor, Building D, No. 48 Paotai Road, Lisonglang Community, Gongming Sub-district, Guangming District, Shenzhen, Guangdong, P.R. China
Website: www.cfclopot.com E-mail:uvclcd@qq.com

1. General Description

This 3939-packaged UVB LED is a high-efficiency solid-state ultraviolet light source operating in the 290–300 nm wavelength band. Equipped with an integrated 60° optical lens, it delivers well-controlled irradiance with uniform beam distribution. At a typical forward current of 350 mA, the device achieves 80.0–140.0 mW of radiant output power with a forward voltage of 4.8–6.0 V. It features excellent thermal stability, high reliability and long service life, making it suitable for a wide range of professional UV application scenarios.

2. Key Features

- Peak wavelength range: 290.0 – 300.0 nm (UVB spectral band)
- Standard 3939 SMD package with integrated round optical lens
- Package dimensions: 3.90 × 3.90 × 2.95 mm (Diameter × Thickness)
- Gold (Au) positive and negative electrodes for high reliability
- Low thermal resistance ceramic substrate
- RoHS, CE and REACH compliant
- 100% visual and electrical inspection before shipment

3. Application Fields

- Medical phototherapy systems: Narrow-band UVB treatment for psoriasis, vitiligo, atopic dermatitis and other skin disorders
- Healthcare devices: Equipment for vitamin D biosynthesis stimulation
- Industrial UV curing: Curing of specialty adhesives, inks, coatings and photoresists
- Analytical instruments: Biological detection, spectral analysis and laboratory UV light sources
- Horticultural lighting: UVB spectrum supplementation for plant growth and secondary metabolite regulation
- Scientific research: Photochemical synthesis, material aging testing and photobiology studies

Address: 6th Floor, Building D, No. 48 Paotai Road, Lisonglang Community, Gongming Sub-district, Guangming District, Shenzhen, Guangdong, P.R. China
Website: www.cfclopot.com E-mail:uvclcd@qq.com

4. Absolute Maximum Ratings

(Test condition: Ambient temperature Ta = 25°C)

Parameter	Symbol	Rating	Unit
Forward Current	I_F	350	mA
Peak Forward Current (10% duty cycle, 1ms pulse)	$I_{F(peak)}$	500	mA
Reverse Voltage	V_R	5	V
Operating Temperature Range	T_{opr}	-40 ~ +85	°C
Storage Temperature Range	T_{stg}	-40 ~ +100	°C
Maximum Junction Temperature	T_j	105	°C

5. Electro-Optical Characteristics

(Test condition: Ta = 25°C, Forward current I_F = 350 mA)

Parameter	Symbol	Min.	Typ.	Max.	Unit
Peak Wavelength	λ_p	290.0	295.0	300.0	nm
Spectral Half-Width	Δλ	-	12	-	nm
Forward Voltage	V_F	4.8	5.4	6.0	V
Radiant Output Power	P_e	80.0	100.0	140.0	mW
Viewing Angle (Half Intensity)	$2\theta_{1/2}$	-	60	-	deg
Reverse Leakage Current	I_R	-	-	10	μA
Thermal Resistance (Junction to Board)	$R_{th(j-b)}$	-	18	-	°C/W

6. Binning Specifications

(Test condition: Ta = 25°C, I_F = 350 mA)

6.1 Forward Voltage Binning

Level	A01	A02	A03	A04	A05	A06
Min. (V)	4.8	5.0	5.2	5.4	5.6	5.8
Max. (V)	5.0	5.2	5.4	5.6	5.8	6.0

6.2 Radiometric Power Binning

Level	-800				
Min.	80.0 mW	90.0 mW	100.0 mW	110.0 mW	120.0 mW -
Max.	90.0 mW	100.0 mW	110.0 mW	120.0 mW	140.0 mW

6.3 Dominant Wavelength Binning

Level	295A	295B
Min.	290.0 nm	295.0 nm
Max.	295.0 nm	300.0 nm

7. Outline Dimensions

- **Package Type:** 3939 SMD Round Lens
- **Overall Dimensions:** 3.90 ± 0.10 mm (Length) × 3.90 ± 0.10 mm (Width) × 2.95 ± 0.10 mm (Height)
- **Lens Diameter:** φ3.0mm (High-purity quartz glass)
- **Pad Layout:** Standard 3939 SMD footprint

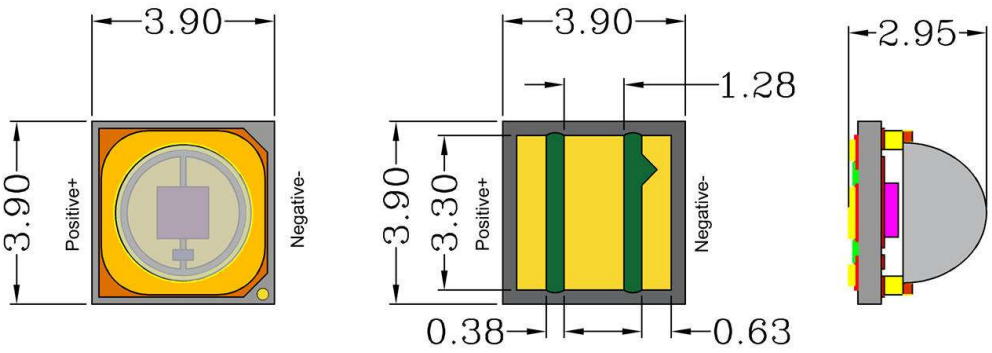

8. Packaging & Storage

8.1 Packaging

- Packaging form: Tape and reel
- Quantity per reel: 600 pieces
- Reel diameter: 178 mm (7 inch)
- Moisture Sensitivity Level: MSL 3

8.2 Storage Conditions

- Store in a dry environment at room temperature
- Recommended storage: 5°C ~ 30°C, 30% ~ 70% RH
- Avoid direct sunlight, corrosive gases and high humidity
- Reseal the bag properly after opening to prevent moisture absorption

9. Notes & Precautions

1. Peak wavelength tolerance: ± 3.5 nm
2. Radiant flux measurement tolerance: ± 10%
3. Forward voltage tolerance: ± 10%
4. All parameters are measured at chip level by UV-CHIPS
5. UVB LEDs emit high-energy ultraviolet radiation. Avoid direct exposure to eyes or skin during operation.
6. The device is sensitive to electrostatic discharge (ESD). Proper ESD protection is required during handling and assembly.
7. Operating beyond absolute maximum ratings may cause permanent damage to the device.