HK275S39CL-250

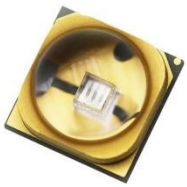

Specification Datasheet

CFCL Optoelectronics (Shenzhen) Co., Ltd.

Model No.: HK275S39CL-250

Product: 3939 high-purity quartz glass lens package UVC LED (20 × 20 mil chip)

Revision: V1.0

Date: October 2026

Table of Contents

No.	Item	Page
1	General Description	2
2	Key Features	2
3	Application Fields	2, 3
4	Absolute Maximum Ratings	3
5	Electro-Optical Characteristics	3, 4
6	Binning Specifications	4
7	Outline Dimensions	4, 5
8	Packaging & Storage	5
9	Notes & Precautions	5

Address: 6th Floor, Building D, No. 48 Paotai Road, Lisonglang Community, Gongming Sub-district, Guangming District, Shenzhen, Guangdong, P.R. China
Website: https://www.cfclopto.com E-mail:uvclcd@qq.com

1. General Description

The HK275S39CL-250 is a high-performance deep-ultraviolet (UVC) LED in a 3939 (3.9 × 3.9 mm) SMD package with a high-purity quartz glass lens (60° viewing angle), integrating a 20 × 20 mil high-efficiency UVC LED chip. It delivers stable ultraviolet output in the 270–280 nm range, with excellent thermal dissipation and a long operating lifetime.

This device is fully compatible with standard surface mount technology (SMT) assembly processes, and is suitable for various sterilization and disinfection applications. All products undergo 100% testing and sorting by forward voltage, optical power and wavelength before delivery.

2. Key Features

- Peak wavelength range: 270.0 – 280.0 nm
- 20 × 20 mil UVC LED chip
- High-purity quartz glass lens (60° viewing angle) on the 3939 SMD package
- Package dimensions: 3.90 × 3.90 × 2.95 mm (Length × Width × Height)
- Gold (Au) positive and negative electrodes for high reliability
- Low thermal resistance ceramic substrate
- RoHS, CE and REACH compliant
- 100% visual and electrical inspection before shipment

3. Application Fields

- Drinking water sterilization systems
- Air purifiers and HVAC disinfection units
- Surface disinfection equipment
- Medical device sterilization
- Biological analysis instruments
- High-power UVC LED modules for large-area treatment; specialty short-wave UV curing
- Dual-mechanism disinfection via simultaneous DNA damage and protein denaturation

4. Absolute Maximum Ratings

(Test condition: Ambient temperature Ta = 25°C)

Parameter	Symbol	Rating	Unit
Forward Current	I_F	100	mA
Peak Forward Current (10% duty cycle, 1ms pulse)	$I_{F(peak)}$	150	mA
Reverse Voltage	V_R	5	V
Operating Temperature Range	T_{opr}	-40 ~ +85	°C
Storage Temperature Range	T_{stg}	-40 ~ +100	°C
Maximum Junction Temperature	T_j	105	°C

5. Electro-Optical Characteristics

(Test condition: Ta = 25°C, Forward current I_F = 100 mA)

Parameter	Symbol	Min.	Typ.	Max.	Unit
Peak Wavelength	λ_p	270.0	275.0	280.0	nm
Spectral Half-Width	Δλ	-	12	-	nm
Forward Voltage	V_F	4.8	5.4	6.0	V
Radiant Output Power	P_e	15.0	20.0	40.0	mW
Viewing Angle (Half Intensity)	$2\theta_{1/2}$	-	60	-	deg
Reverse Leakage Current	I_R	-	-	10	μA
Thermal Resistance (Junction to Board)	$R_{th(j-b)}$	-	18	-	°C/W

6. Binning Specifications

(Test condition: Ta = 25°C, I_F = 100 mA)

6.1 Forward Voltage Binning

Level	A01	A02	A03	A04	A05	A06
Min. (V)	4.8	5.0	5.2	5.4	5.6	5.8
Max. (V)	5.0	5.2	5.4	5.6	5.8	6.0

6.2 Radiometric Power Binning

Level	P1	P2	P3	P4
Min.	15.0 mW	20.0 mW	25.0 mW	30.0 mW
Max.	20.0 mW	25.0 mW	30.0 mW	40.0 mW

6.3 Peak Wavelength Binning

Level	275A	275B
Min.	270.0 nm	275.0 nm
Max.	275.0 nm	280.0 nm

7. Outline Dimensions

- **Package Type: 3939 SMD high-purity quartz glass lens package**
- **Overall Dimensions:** 3.90 ± 0.10 mm (Length) × 3.90 ± 0.10 mm (Width) × 2.95 ± 0.10 mm (Height)
- **Lens Diameter: φ3.0 mm (High-purity quartz glass)**
- **Pad Layout:** Standard 3939 SMD footprint

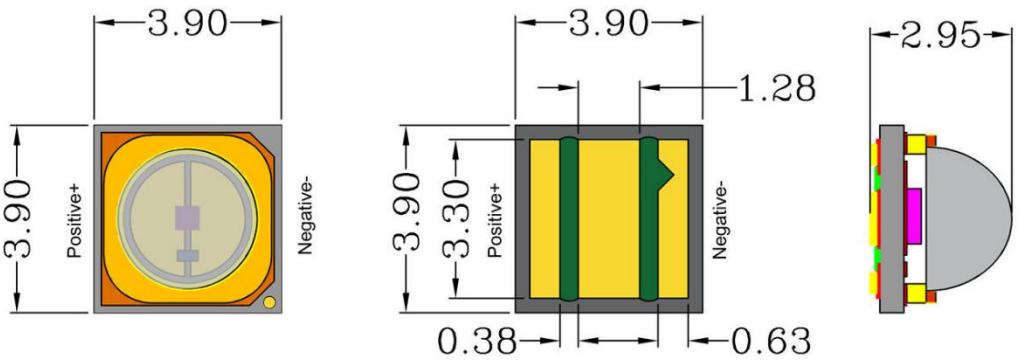

8. Packaging & Storage

8.1 Packaging

- Packaging form: Tape and reel
- Quantity per reel: 600 pieces
- Reel diameter: 178 mm (7 inch)
- Moisture Sensitivity Level: MSL 3

8.2 Storage Conditions

- Store in a dry environment at room temperature
- Recommended storage: 5°C ~ 30°C, 30% ~ 70% RH
- Avoid direct sunlight, corrosive gases and high humidity
- Reseal the bag properly after opening to prevent moisture absorption

9. Notes & Precautions

1. Peak wavelength tolerance: ± 2.0 nm
2. Radiant flux measurement tolerance: ± 10%
3. Forward voltage tolerance: ± 10%
4. All parameters are measured at chip level by UV-CHIPS
5. UVC LEDs emit high-energy ultraviolet radiation. Avoid direct exposure to eyes or skin during operation.
6. The device is sensitive to electrostatic discharge (ESD). Proper ESD protection is required during handling and assembly.
7. Operating beyond absolute maximum ratings may cause permanent damage to the device.