连杆锁型号说明
Rod lock model description

LG123 1 N 1 Y G 001

- 001 — 流水号 Serial number
- G — 表面处理（参照表面处理表） Finish (refer to surface treatment table)
- Y — 挂扣（带挂扣Y，无挂扣N） Buckle (with buckle Y,without buckle N)
- 1 — 锁芯代码（1常规钥匙钥匙芯，2翼型锁芯4MM） Cylinder code (1 standard key lock cylinder 2 double bit cylinder 4MM)
- N — 防尘盖（有Y，无N） Dustproof cap (With dustproof cap Y, without dustproof cap N)
- 1 — 连动的类型（1舌片，2齿条，3钢栓） Type of linkage (1 cam, 2 rack, 3 bolt)
- LG123 — 连杆型号 Connecting rod type

锁芯代码参照此表格 Cylinder Code Refers to this Table

锁芯类型 Cylinder type	无锁芯 No cylinder	常规钥匙锁芯 Standard key lock cylinder	翼型锁芯 Double bit cylinder	三角锁芯 Triangle cyliner	四方锁芯 Square cylinder	内六角锁芯 Inner hexagon cylinder
锁芯代码 Cylinder code	0	1	2	3	4	5

举例说明:一款LG123型号的连杆锁,连动的类型为舌片,无防尘盖,锁芯为常规钥匙锁芯,带挂扣,表面处理为喷涂黑色,型号为LG123-1N1Y-XX

For example : a LG123 type connecting rod lock, the type of linkage is cam, no dust cover, the lock core is a standard key lock cylinder, witha buckle,the surface treatment is sprayed black, Model LG123-1N1Y-XX

锁芯 Cylinder

款式 A
Version A

款式 B
Version B

款式 A
Version A

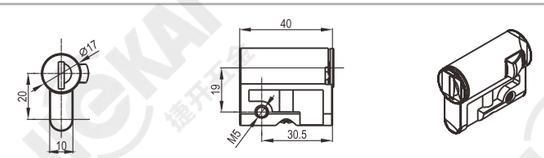

款式 B
Version B

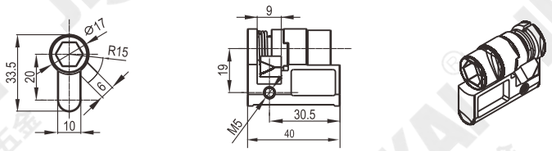

连杆锁安装示意图
Diagram of rod lock installation

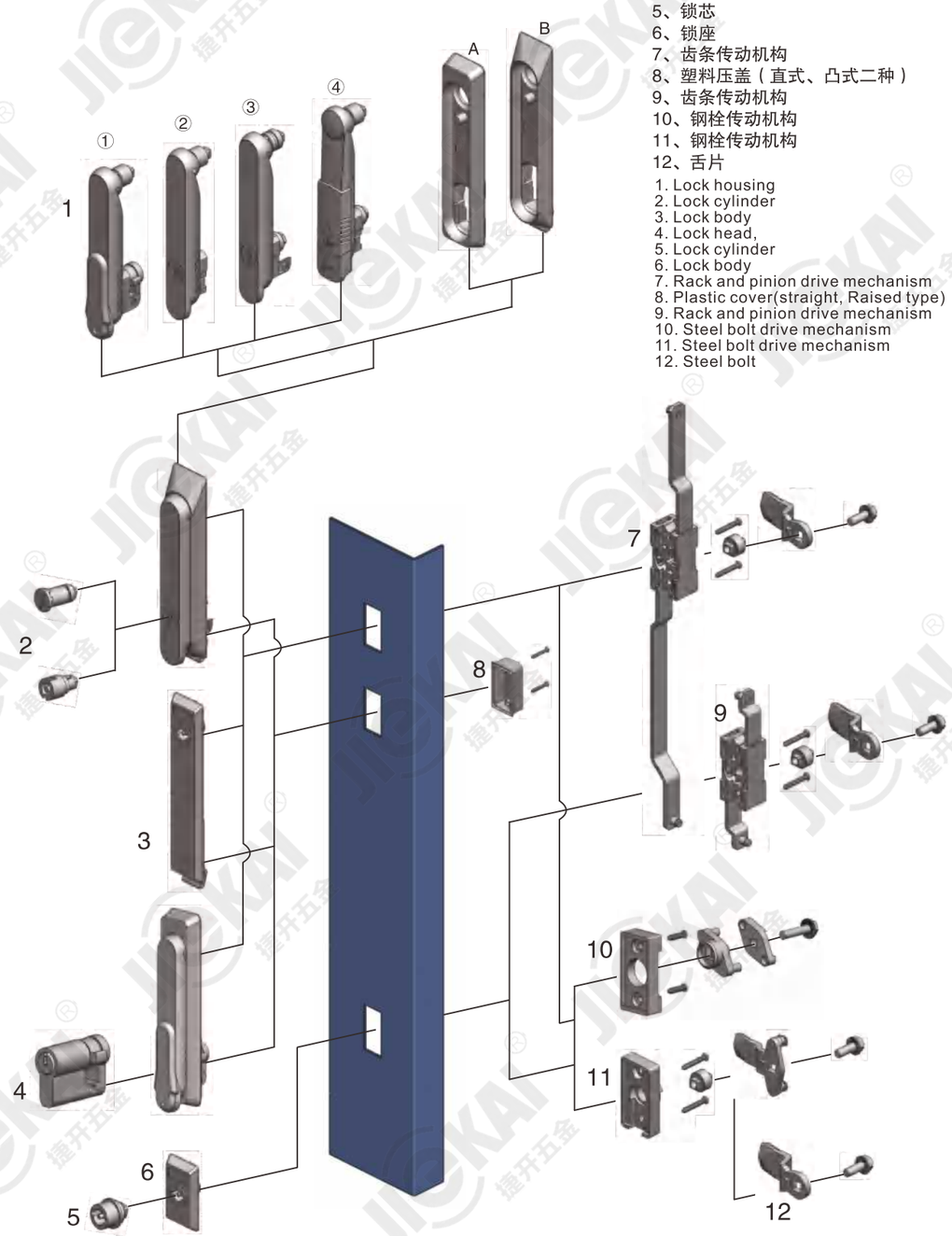

1、锁体
2、锁芯
3、锁座
4、锁头
5、锁芯
6、锁座
7、齿条传动机构
8、塑料压盖（直式、凸式二种）
9、齿条传动机构
10、钢栓传动机构
11、钢栓传动机构
12、舌片

1. Lock housing
2. Lock cylinder
3. Lock body
4. Lock head,
5. Lock cylinder
6. Lock body
7. Rack and pinion drive mechanism
8. Plastic cover(straight, Raised type)
9. Rack and pinion drive mechanism
10. Steel bolt drive mechanism
11. Steel bolt drive mechanism
12. Steel bolt

电源锁 Key switch lock
转舌锁 Cam lock
圆柱锁 Quarter turn lock
连杆锁 Rob control lock
平面锁 Plane lock
把手锁 Handle lock
面板锁 Panel lock
拉 手 Handles
限 位 Door stop
外装铰链 External hinge
内装铰链 Internal hinge
搭 扣 Toggle lock
密封条 Gasket
配 件 Accessories

连杆锁的长度计算

The calculation method for connecting rod length

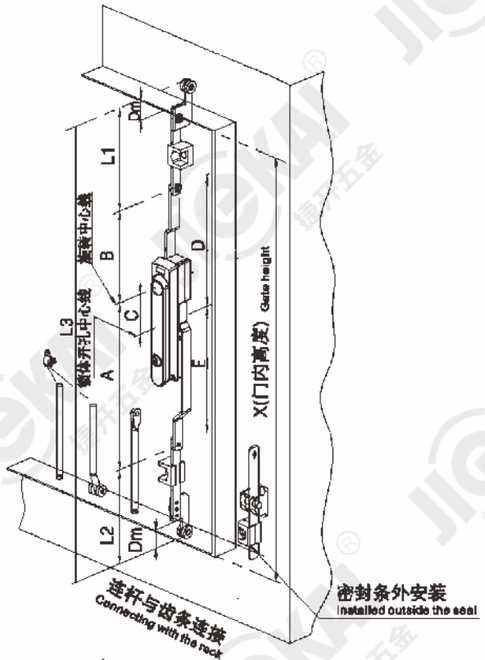

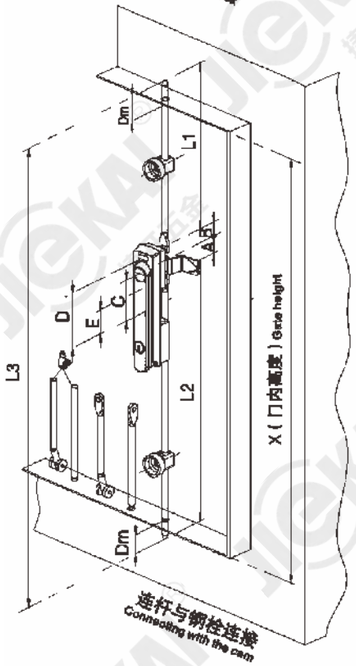

根据门内高度计算连杆长度

门板中心与锁体旋转中心线重合:

L1=X/2-B+(Dm-2)

L2=X/2-A+(Dm-2)

门板中心与锁体开孔中心线重合:

L1=X/2-D+(Dm-2)

L2=X/2-(A-C)+(Dm-2)

注:如有连接件(如2076-011 15),应减掉连接件的有效长度;计算方法适用于密封条内安装的连杆长度计算;其计算方法,仅供参考,使用时应考虑连杆的实际安装条件;密封条外安装的连杆长度计算可根据柜子要求取长度,但连杆安装后的总长度3应小于框内高度

Dm:收缩行程

Computation connecting rod length according to the gate height

Door plank centerline coincides with lock rotation centerline:

L1=X/2-B+(Dm-2)

L2=X/2-A+(Dm-2)

Door plank centerline coincides with cutout centerline for lock:

L1=X/2-D+(Dm-2)

L2=X/2-(A-C)+(Dm-2)

Note: if you fixed Joined part (such as 2076 - 01115), you should subtract the effective length of joined part from rod length;

The calculation method is applicable to Assembling inside the gasket for rod;

The calculation method of using is only for reference, you should be considered with the actual installation conditions;

The calculation method for rod assembling outside the gasket is according to the requirements, but the length of L3 should be less than gate height of frame;

Dm: Shrinkage range

电源锁 Key switch lock
转舌锁 Cam lock
圆柱锁 Quarter turn lock
连杆锁 Rob control lock
平面锁 Plane lock
把手锁 Handle lock
面板锁 Panel lock
拉手 Handles
限位 Door stop
外装铰链 External hinge
内装铰链 Internal hinge
搭扣 Toggle lock
密封条 Gasket
配件 Accessories

R00

单点型
One locked

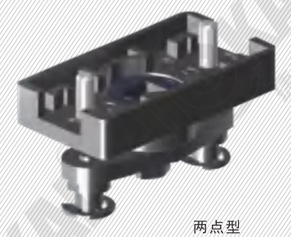

两点型
Two locked

三点型
Three locked

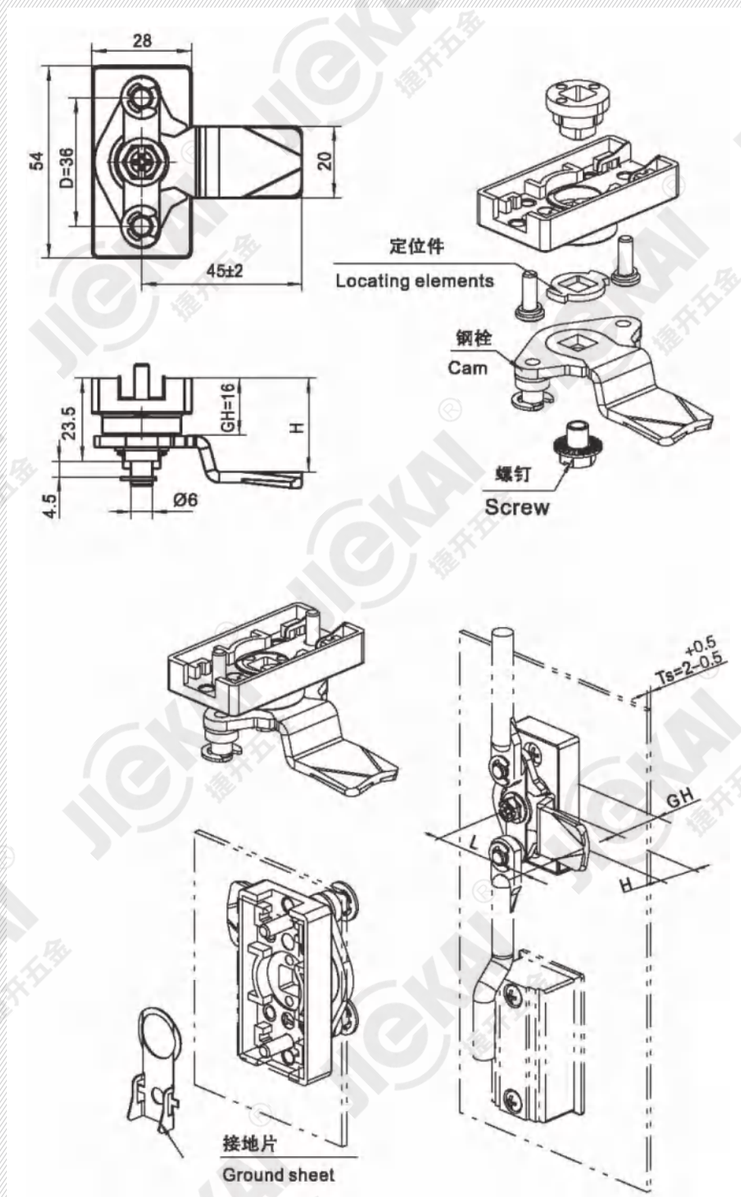

产品说明

Description

◆ 镀锌钢，钢栓，锌合金镀锌传动壳

Galvanized steel cam , zinc alloy galvanized transmission shell.

适用板厚Ts Thickness of plate	单点型 One locked	两点型 Two locked	三点型 Three locked
TS=2$^{+0.5}_{-0.5}$	R00-11EO	R00-21EO	R00-31EO

R01

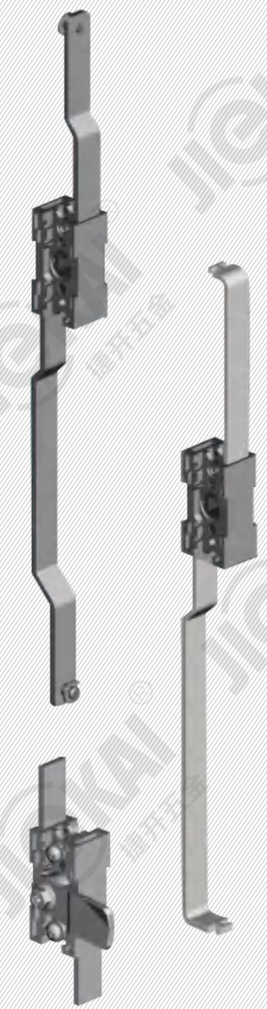

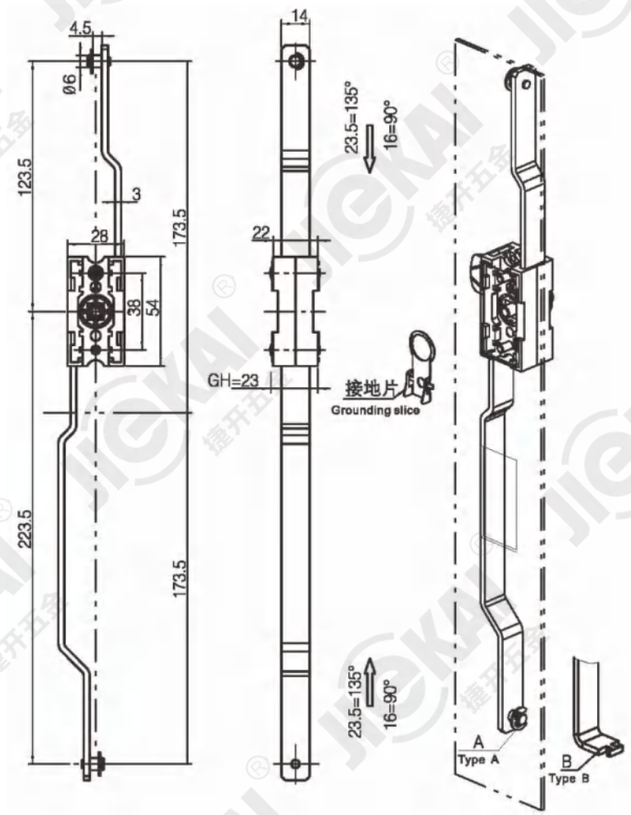

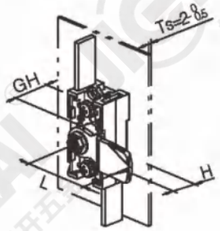

带钢栓
With cam

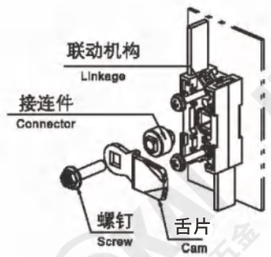

产品说明
Description

◆ 镀锌钢齿条，钢栓，锌合金镀锌传动壳
Galvanized steel rack and cam , zinc alloy galvanized transmission shell.

A式，无钢栓 Type A, without cam	A式，带钢栓H=25 L=35 Type A, with cam	B式，无钢栓 Type B, without cam	B式，带钢栓H=25 L=35 Type B, with cam
R01-AO1EO	R01-AS1EO	R01-BO1EO	R01-BS1EO

电源锁 Key switch lock
转舌锁 Cam lock
圆柱锁 Quarter turn lock
连杆锁 Rob control lock
平面锁 Plane lock
把手锁 Handle lock
面板锁 Panel lock
拉手 Handles
限位 Door stop
外装铰链 External hinge
内装铰链 Internal hinge
搭扣 Toggle lock
密封条 Gasket
配件 Accessories

R02

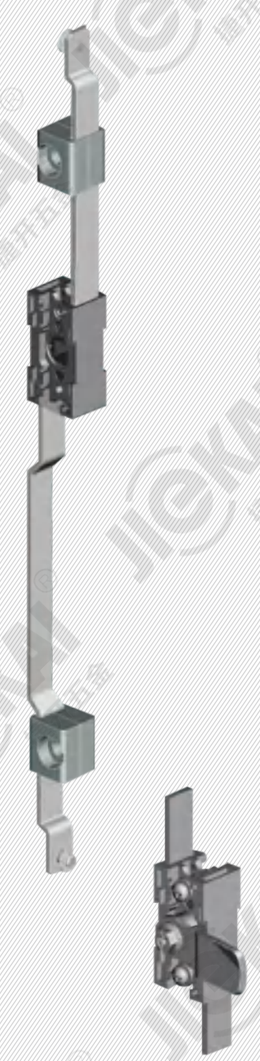

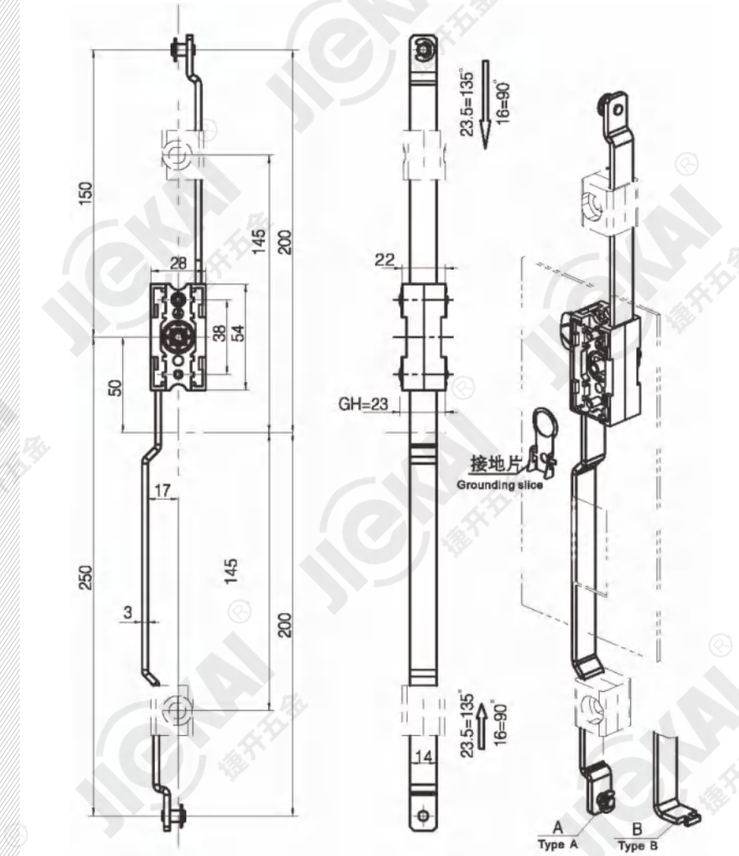

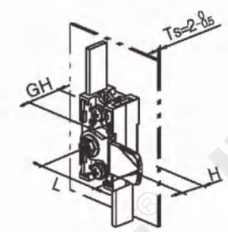

带钢栓
With cam

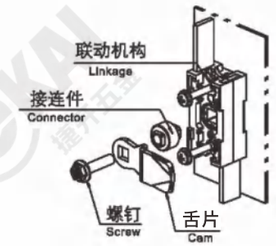

产品说明
Description

◆ 镀锌钢齿条，钢栓，锌合金镀锌传动壳
Galvanized steel rack and cam , zinc alloy galvanized transmission shell.

A式，无钢栓 Type A, without cam	A式，带钢栓H=25 L=35 Type A, with cam	B式，无钢栓 Type B, without cam	B式，带钢栓H=25 L=35 Type B, with cam
R02-AO1EO	R02-AS1EO	R02-BO1EO	R02-BS1EO

R03

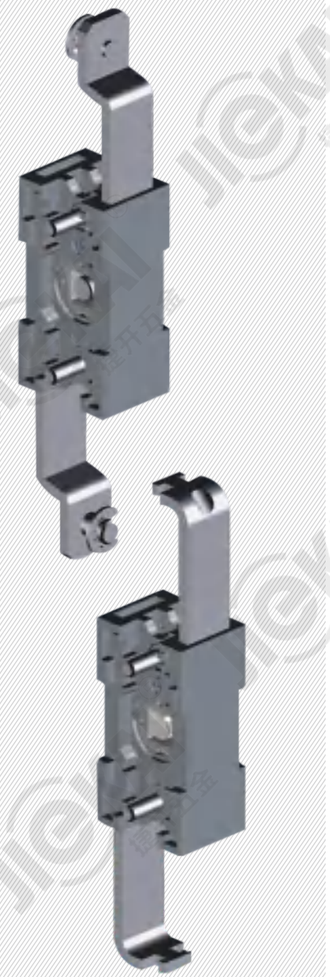

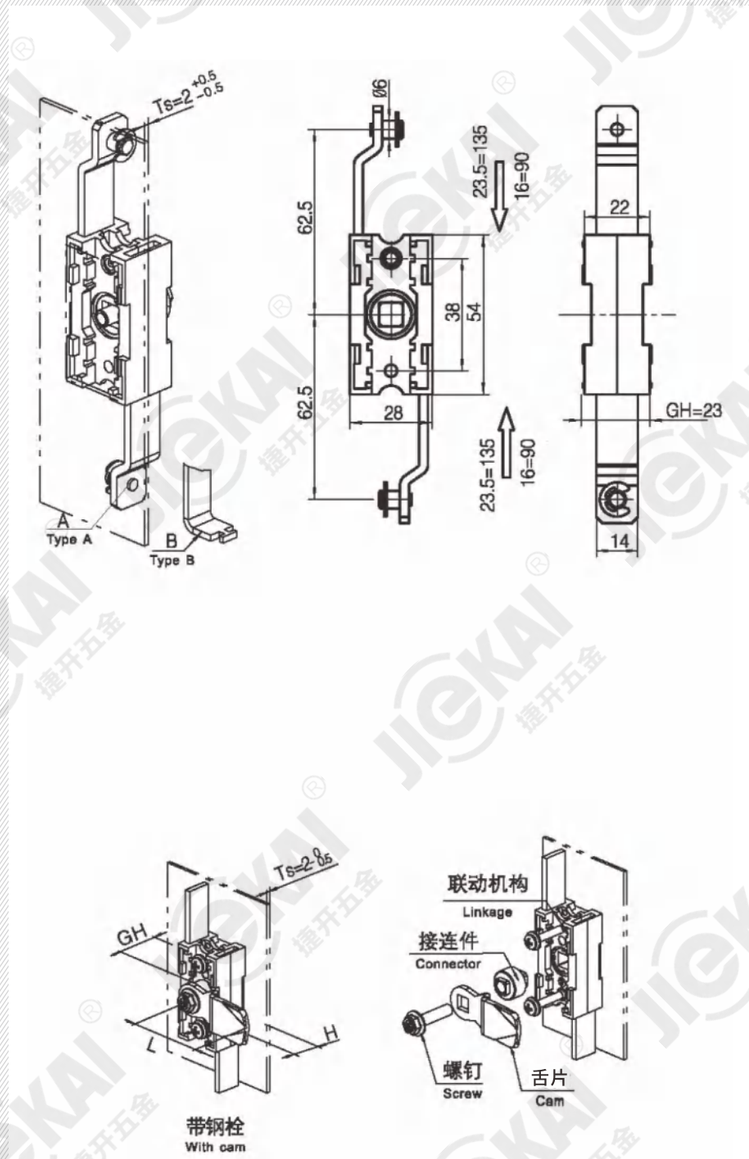

产品说明
Description

◆ 镀锌钢齿条，钢栓，锌合金镀锌传动壳
Galvanized steel rack and cam , zinc alloy galvanized transmission shell.

A式，无钢栓 Type A, without cam	A式，带钢栓H=25 L=35 Type A, with cam	B式，无钢栓 Type B, without cam	B式，带钢栓H=25 L=35 Type B, with cam
R03-AO1EO	R03-AS1EO	R03-BO1EO	R03-BS1EO

电源锁 Key switch lock
转舌锁 Cam lock
圆柱锁 Quarter turn lock
连杆锁 Rob control lock
平面锁 Plane lock
把手锁 Handle lock
面板锁 Panel lock
拉手 Handles
限位 Door stop
外装铰链 External hinge
内装铰链 Internal hinge
搭扣 Toggle lock
密封条 Gasket
配件 Accessories

R04

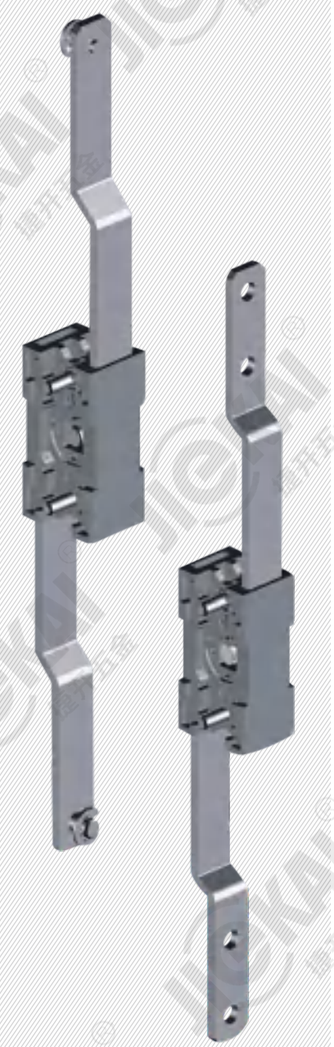

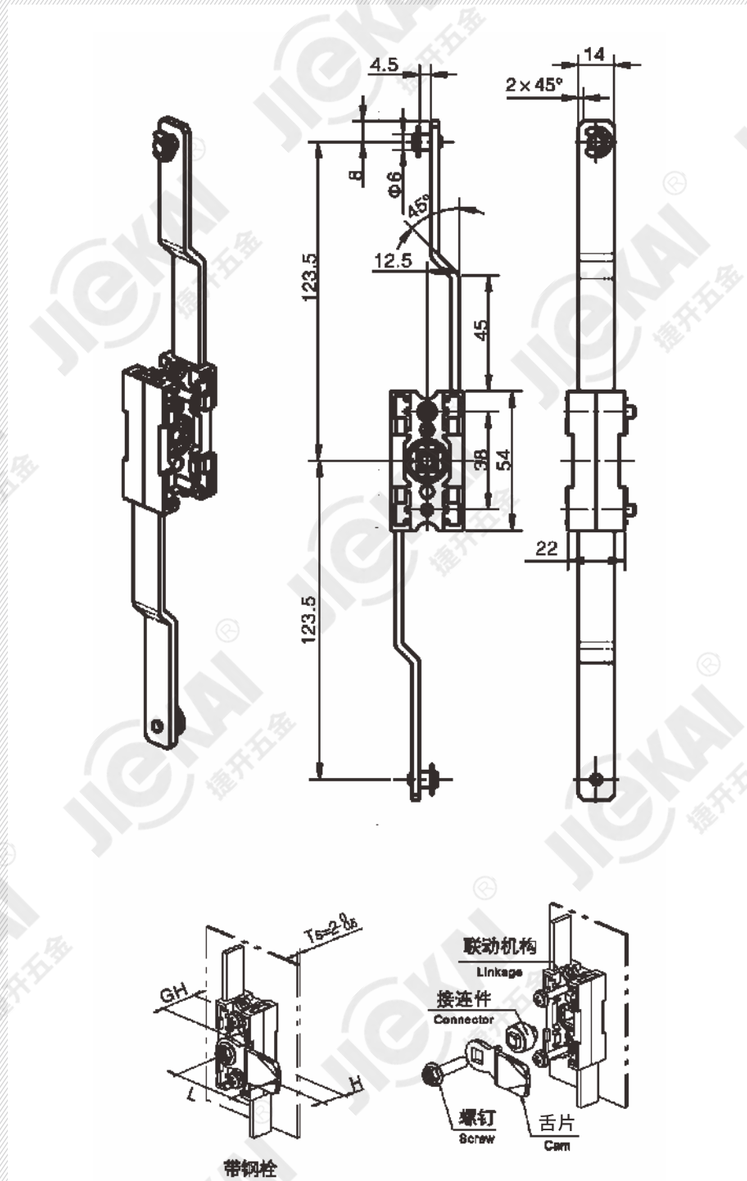

产品说明
Description

◆ 镀锌钢齿条，钢栓，锌合金镀锌传动壳
Galvanized steel rack and cam , zinc alloy galvanized transmission shell.

铆销型，无钢栓 Rivet pin type without cam	铆销型，带钢栓,H=25 L=35 Rivet pin type with cam	双孔型，无钢栓 Double hole type without cam	双孔型，带钢栓,H=23 L=35 Double hole type with cam
R04-AO1EO	R04-AS1EO	R04-BO1EO	R04-BS1EO

R05

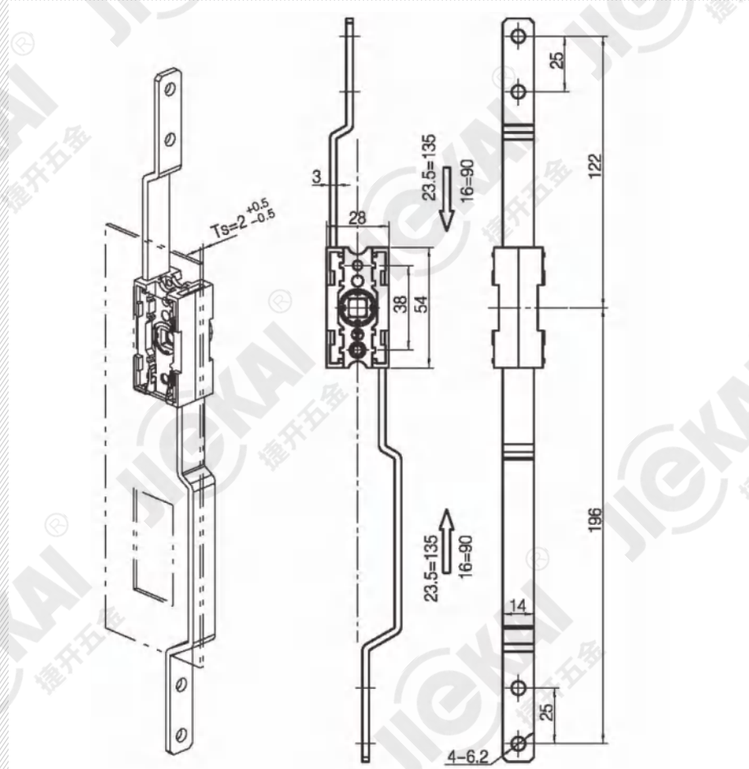

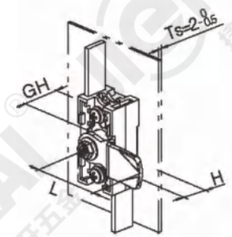

带钢栓
With cam

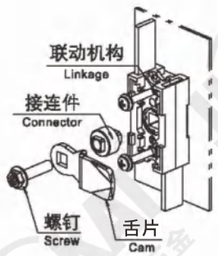

产品说明
Description

◆ 镀锌钢齿条，钢栓，锌合金镀锌传动壳
Galvanized steel rack and cam , zinc alloy galvanized transmission shell.

无钢栓 Without cam	带钢栓,H=25 L=35 With cam
R05-AO1EO	R05-AS1EO

连杆锁 Rob control lock
JIEKAI®
工业锁具 Industrial lock

R06

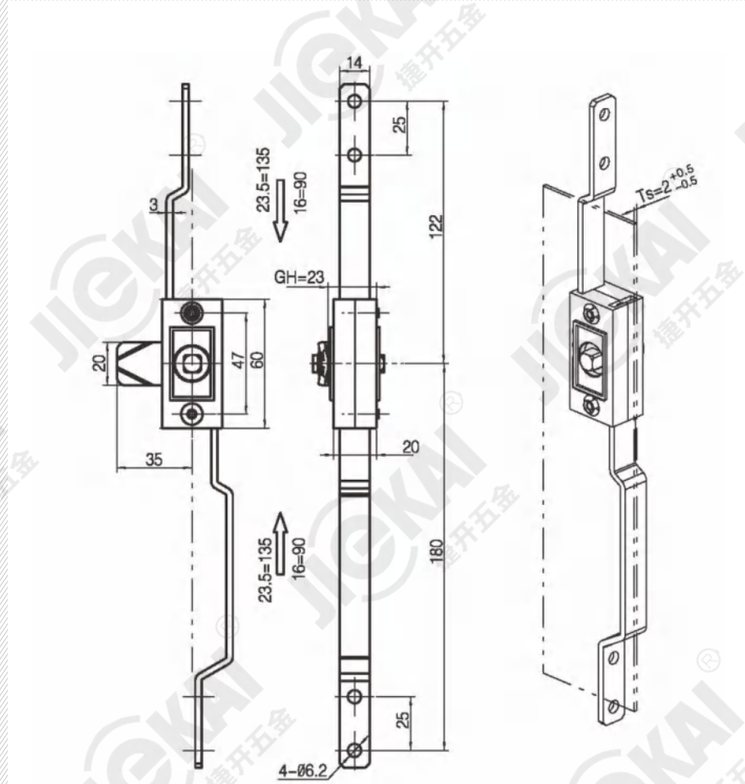

2541-06

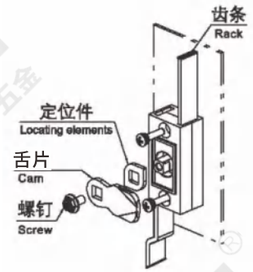

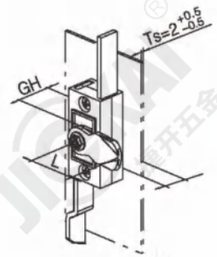

行程可调设计
Travel adjustable design

产品说明
Description

◆ 镀锌钢齿条，钢栓，锌合金镀锌传动壳
Galvanized steel rack and cam , zinc alloy galvanized transmission shell.

无钢栓 Without cam	带钢栓,H=25 L=35 With cam
R06-AO1EO	R06-AS1EO

LG100系列

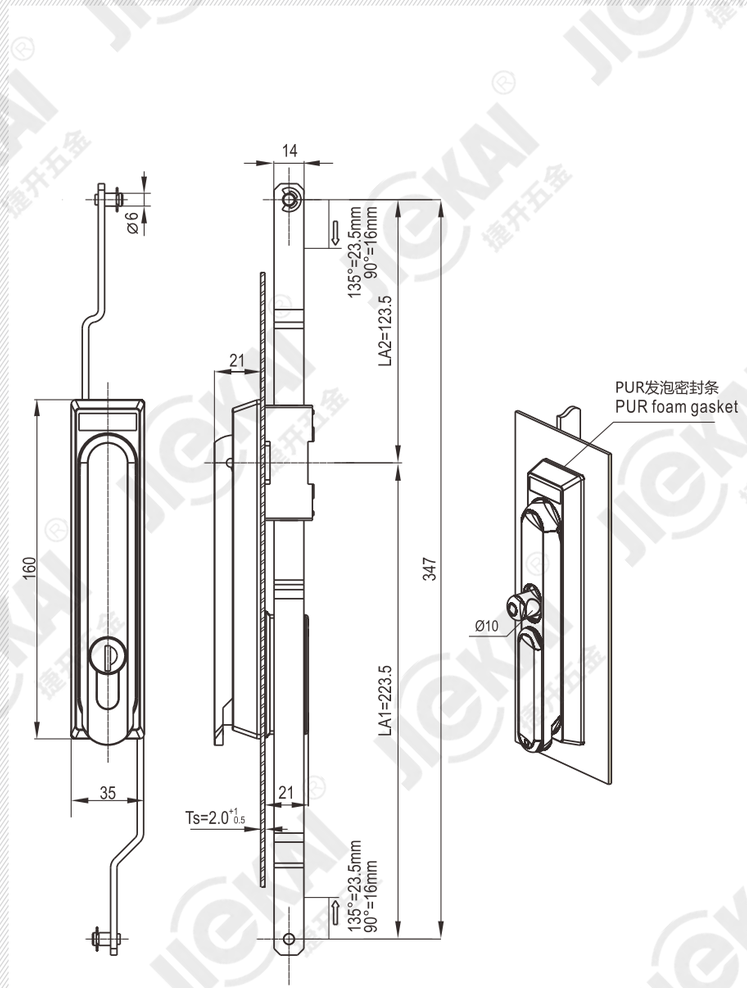

产品说明
Description

◆ 锌合金锁座喷塑黑，锌合金锁柄装置
镀锌钢转轴和拉杆，不锈钢挂锁扣

Zinc die body black powder coated,zinc die rod control,m.s. zinc palted shaft and flat rod,sus304 padlockable device.

锁芯型号 Lock cylinder model	齿条连动型 Linkage for rack type		钢栓连动型 Linkage for cam type	
Jk198钥匙 Key	LG100-2Y1Y-P2	LG100-2N1N-P2	LG100-3Y1Y-P2	LG100-3N1N-P2
翼型 4mm(Double Bit 4mm)	LG100-2Y2Y-P2	LG100-2N2N-P2	LG100-3Y2Y-P2	LG100-3N2N-P2
四方锁芯 7mm(Square 7mm)	LG100-2Y4Y-P2	LG100-2N4N-P2	LG100-3Y4Y-P2	LG100-3N4N-P2
三角锁芯 8mm(Triangular 8mm)	LG100-2Y3Y-P2	LG100-2N3N-P2	LG100-3Y3Y-P2	LG100-3N3N-P2

电源锁 Key switch lock
转舌锁 Cam lock
圆柱锁 Quarter turn lock
连杆锁 Rob control lock
平面锁 Plane lock
把手锁 Handle lock
面板锁 Panel lock
拉手 Handles
限位 Door stop
外装铰链 External hinge
内装铰链 Internal hinge
搭扣 Toggle lock
密封条 Gasket
配件 Accessories

LG100A

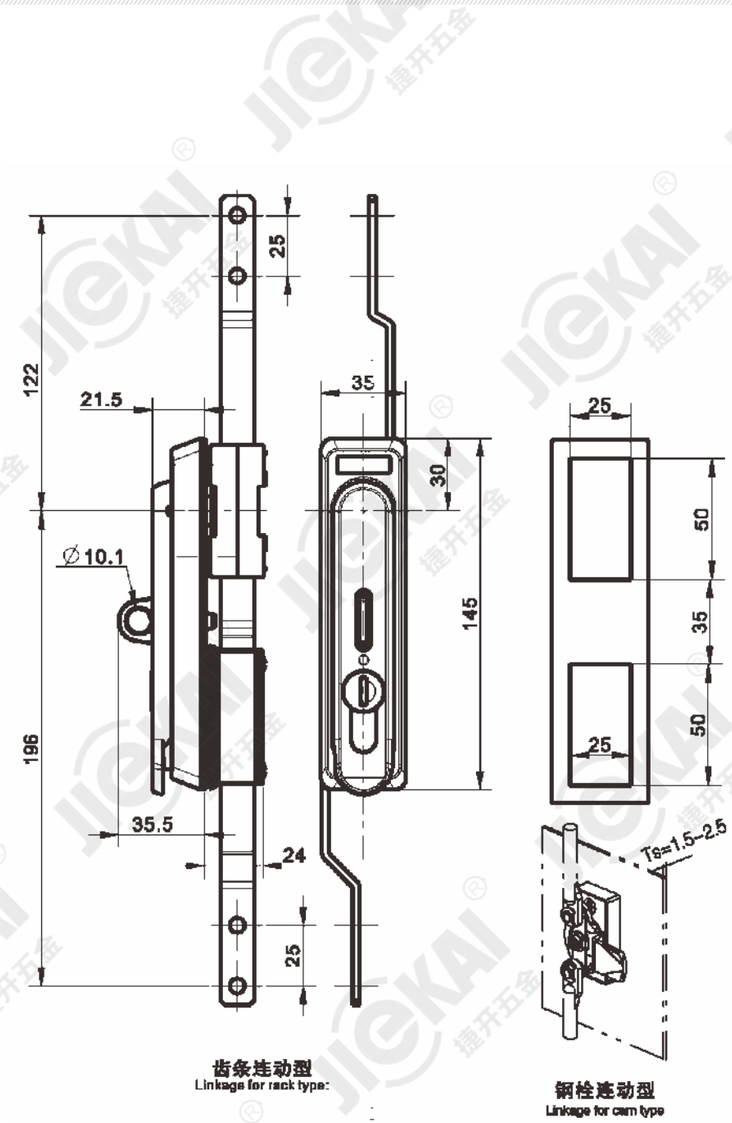

产品说明
Description

◆ 镀锌钢齿条，钢栓，锌合金镀锌传动壳
锌合金黑色锁座，不锈钢挂锁扣

Galvanized steel rack and cam,zinc alloy galvanized transmission shell,zinc alloy black coated lock body stainless steel padlock buckle.

齿条连动型 Linkage for rack type		钢栓连动型 Linkage for cam type	
LG100A-2N1N-P2	LG100A-2N1Y-P2	LG100A-3N1N-P2	LG100A-3N1Y-P2

LG101系列

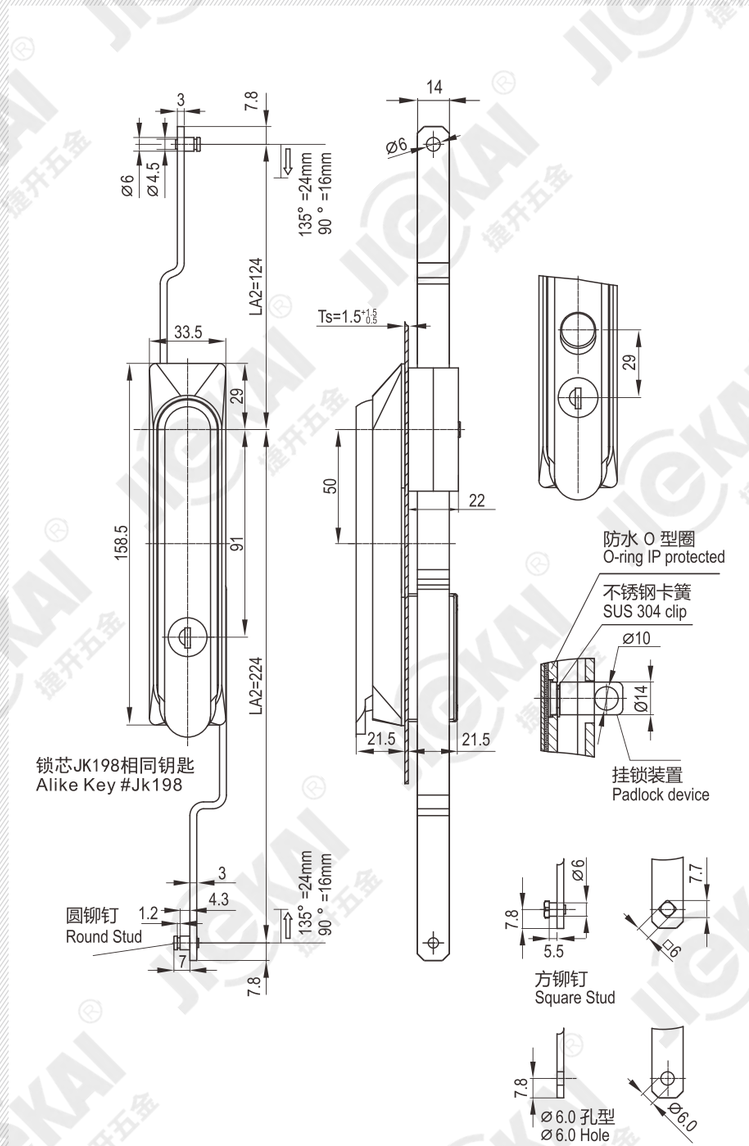

产品说明
Description

- 黑色PA塑料锁座，锌合金锁柄装置，镀锌钢转轴和拉杆

PA lock body,zinc die rod control,m.s zinc plated shaft and flat rod.

锁芯型号 Lock cylinder model	齿条连动型 Linkage for rack type		钢栓连动型 Linkage for cam type	
Jk198钥匙 Key	LG101-2Y1N-P2	LG101-2N1N-P2	LG101-3Y1N-P2	LG101-3N1N-P2

电源锁 Key switch lock
转舌锁 Cam lock
圆柱锁 Quarter turn lock
连杆锁 Rob control lock
平面锁 Plane lock
把手锁 Handle lock
面板锁 Panel lock
拉手 Handles
限位 Door stop
外装铰链 External hinge
内装铰链 Internal hinge
搭扣 Toggle lock
密封条 Gasket
配件 Accessories

LG102系列

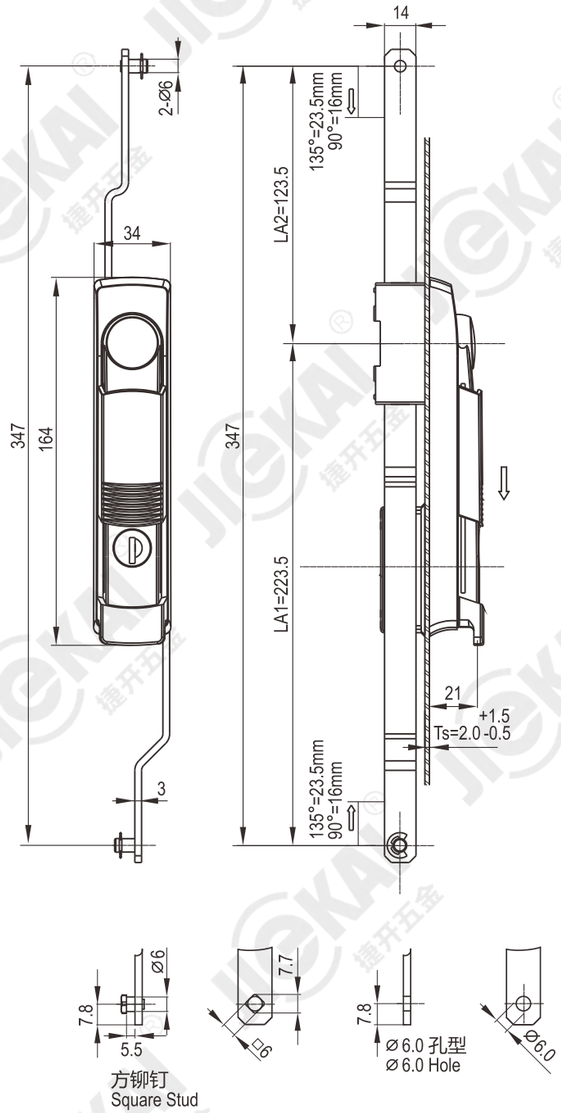

产品说明
Description

- 黑色PA塑料锁座，锌合金锁柄装置，镀锌钢转轴和拉杆

PA lock body,zinc die rod control,m.s zinc plated shaft and flat rod.

锁芯型号 Lock cylinder model	齿条连动型 Linkage for rack type	钢栓连动型 Linkage for cam type
Jk198钥匙 Key	LG102-2Y1N-P2	LG102-3Y1N-P2

LG103系列

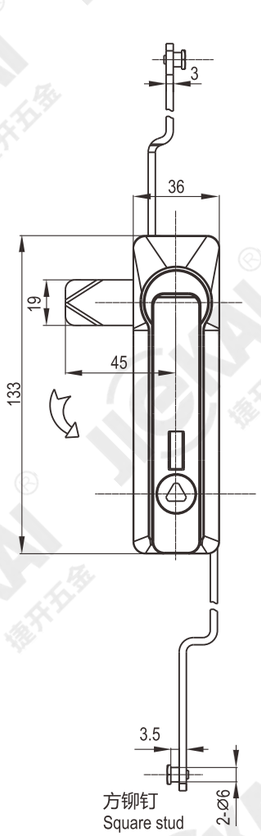

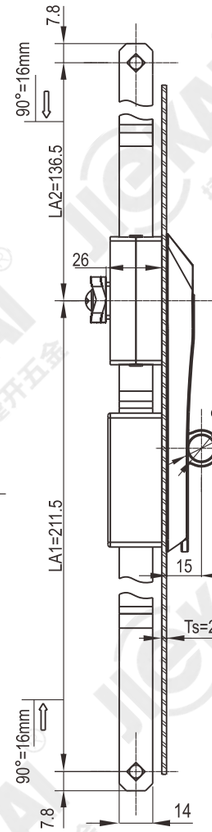

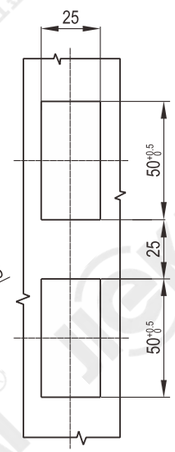

开孔尺寸
Recommended hole size

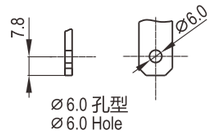

Ø 6.0 孔型
Ø 6.0 Hole

可换CH751锁芯
Can be replaced with
CH751 lock cylinder

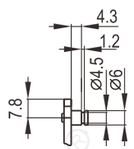

圆铆钉
Round Stud

产品说明
Description

- 锌合金锁座，锌合金锁柄装置，镀锌钢拉杆，锁体表面可做喷塑与电泳黑

Zinc die body and rod control,m.s zinc plated cam, black powder coated or E-coated.

锁芯型号 Lock cylinder model	齿条连动型 Linkage for rack type		钢栓连动型 Linkage for cam type	
Jk198 锁芯 Cylinder	LG103-2N1Y-O1	LG103-2N1Y-P2	LG103-3N1Y-O1	LG103-3N1Y-P2
	LG103-2N1N-O1	LG103-3N1N-P2	LG103-3N1N-O1	LG103-3N1N-P2
三角锁芯 8mm(Triangular 8mm)	LG103-2N3Y-O1	LG103-2N3Y-P2	LG103-3N3Y-O1	LG103-3N3Y-P2
	LG103-2N3N-O1	LG103-2N3N-P2	LG103-3N3N-O1	LG103-3N3N-P2

电源锁 Key switch lock
转舌锁 Cam lock
圆柱锁 Quarter turn lock
连杆锁 Rob control lock
平面锁 Plane lock
把手锁 Handle lock
面板锁 Panel lock
拉手 Handles
限位 Door stop
外装铰链 External hinge
内装铰链 Internal hinge
搭扣 Toggle lock
密封条 Gasket
配件 Accessories

LG104

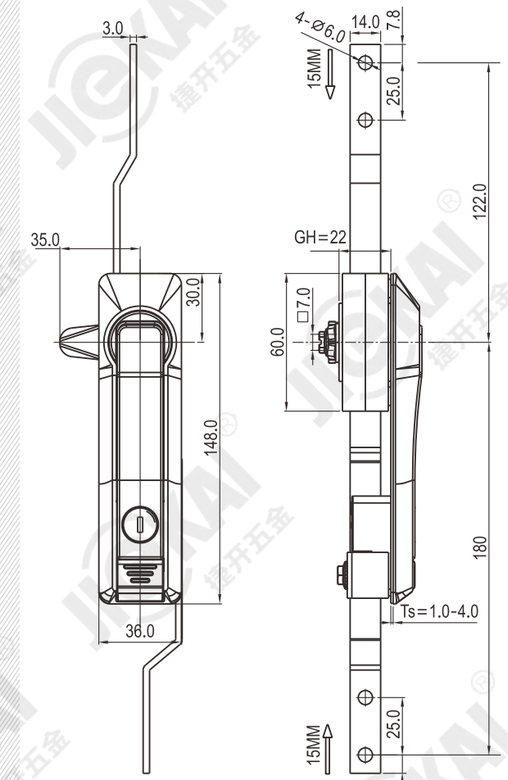

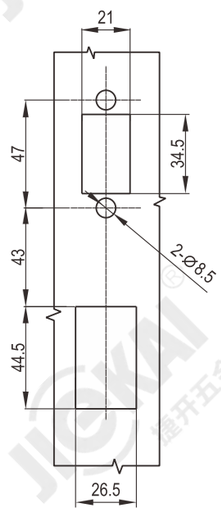

开孔尺寸
Recommended hole size

产品说明
Description

- 锌合金锁座，表面处理可做喷塑及电镀

Zinc die body, black powder coated or satin chrome plated.

转舌型 Cam control		齿条连动型 Linkage for rack type		钢栓连动型 Linkage for cam type	
LG104-1N1N-E5	LG104-1N1N-P2	LG104-2N1N-E5	LG104-2N1N-P2	LG104-3N1N-E5	LG104-3N1N-P2

LG105系列

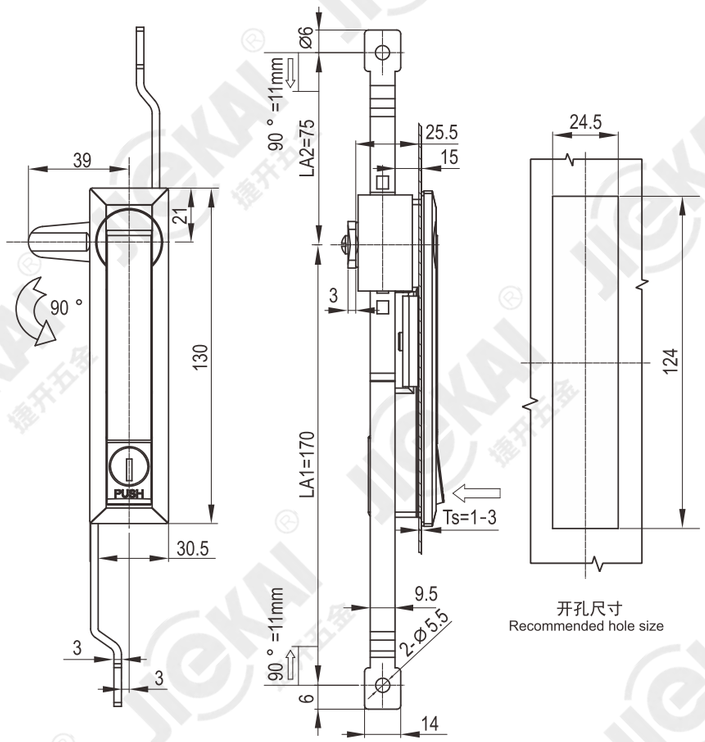

产品说明
Description

◆ 锌合金锁座，表面处理可做喷塑及电镀
Zinc die body, black powder coated or satin chrome plated.

转舌型 Cam control		钢栓连动型 Linkage for cam type	
LG105-1N1N-E5	LG105-1N1N-P2	LG105-3N1N-E5	LG105-3N1N-P2

电源锁 Key switch lock
转舌锁 Cam lock
圆柱锁 Quarter turn lock
连杆锁 Rob control lock
平面锁 Plane lock
把手锁 Handle lock
面板锁 Panel lock
拉手 Handles
限位 Door stop
外装铰链 External hinge
内装铰链 Internal hinge
搭扣 Toggle lock
密封条 Gasket
配件 Accessories

LG106系列

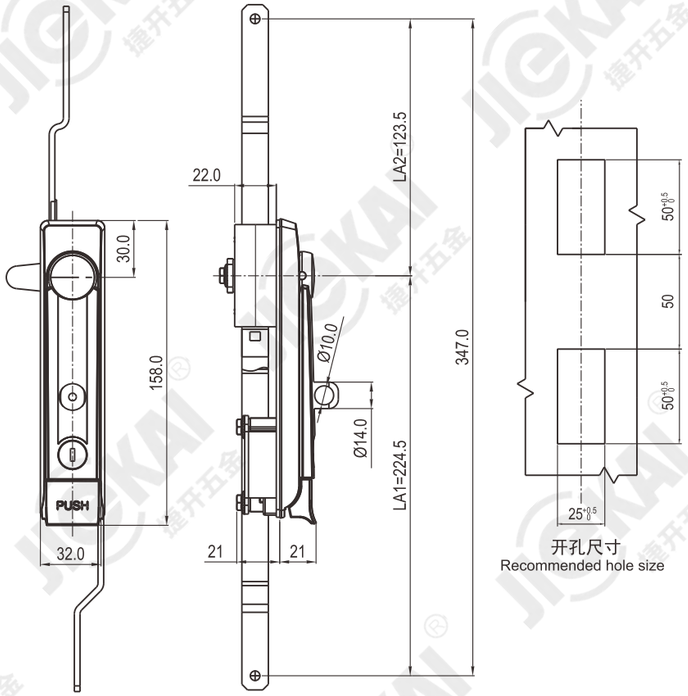

产品说明
Description

◆ 锌合金锁柄，锁座，按钮；镀锌钢栓，传动条表面处理可做喷塑及电镀
Zinc die handle,housing and button;m.s zinc plated cam and control rod. powder coated or chrome plating

钢栓连动型 Linkage for cam type	
LG106-3N1Y-P2	LG106-3N1N-P2

LG107

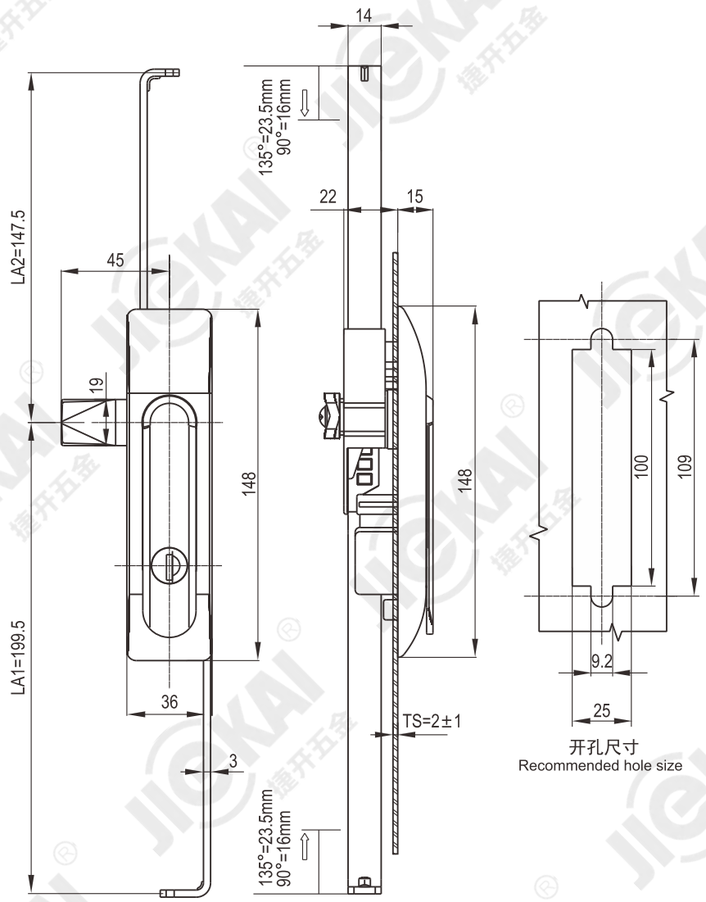

产品说明
Description

- 黑色PA或锌合金锁座，锌合金锁柄，镀锌钢传动条

Black PA or zinc die housing;zinc die handle black powder coated; m.s. zinc plated control flat rod

转舌型 Cam control	钢栓连动型 Linkage for cam type
LG107-1N1N-P2	LG107-3N1N-P2

电源锁 Key switch lock
转舌锁 Cam lock
圆柱锁 Quarter turn lock
连杆锁 Rob control lock
平面锁 Plane lock
把手锁 Handle lock
面板锁 Panel lock
拉手 Handles
限位 Door stop
外装铰链 External hinge
内装铰链 Internal hinge
搭扣 Toggle lock
密封条 Gasket
配件 Accessories

LG108

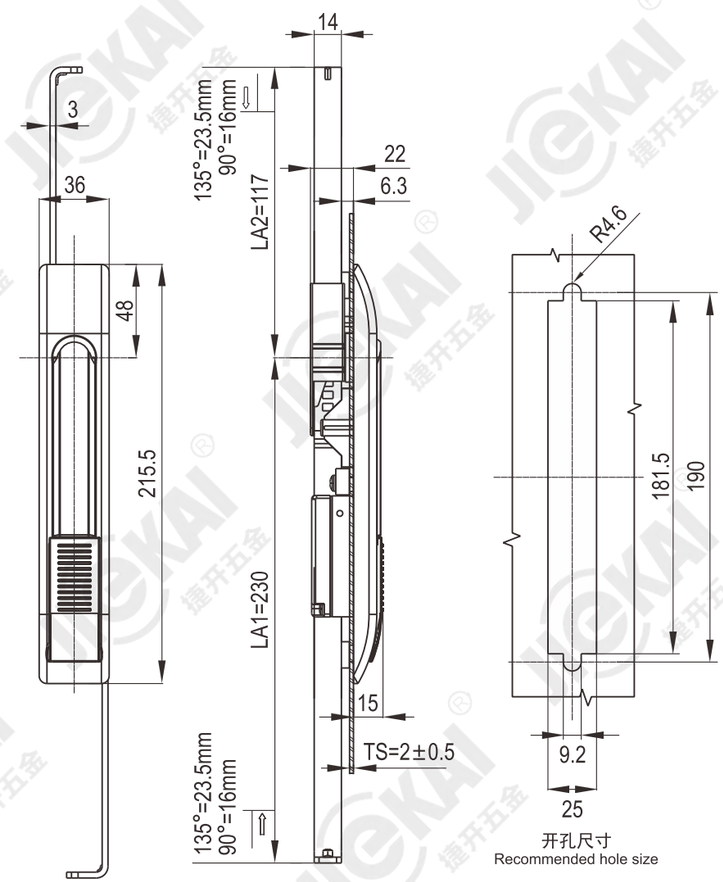

产品说明
Description

- 黑色PA锁座，锌合金锁柄，镀锌钢传动条

Black PA housing;zinc die handle black powder coated;m.s zinc plated control flat rod.

转舌型 Cam control	钢栓连动型 Linkage for cam type
LG108-1Y1N-P2	LG108-3Y1N-P2

LG110系列

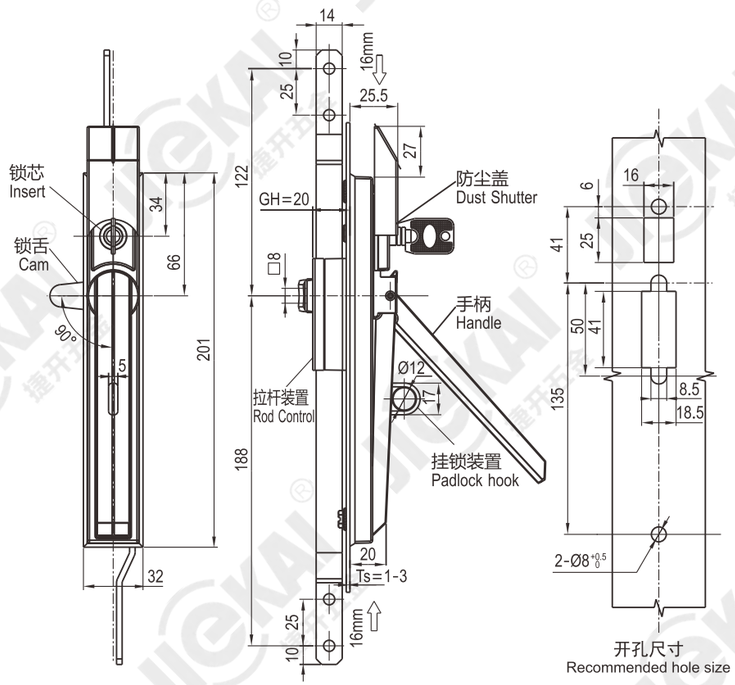

产品说明
Description

- 锌合金锁座锁柄，SUS316挂锁扣，表面处理可做无光黑

Zinc housing handle,SUS316 rod control, black powder coated.

钢栓连动型 Linkage for cam type			
LG110-3Y1Y-P2	LG110-3Y1N-P2	LG110-3Y1Y-P5	LG110-3Y1N-P5

电源锁 Key switch lock
转舌锁 Cam lock
圆柱锁 Quarter turn lock
连杆锁 Rob control lock
平面锁 Plane lock
把手锁 Handle lock
面板锁 Panel lock
拉手 Handles
限位 Door stop
外装铰链 External hinge
内装铰链 Internal hinge
搭扣 Toggle lock
密封条 Gasket
配件 Accessories

LG113

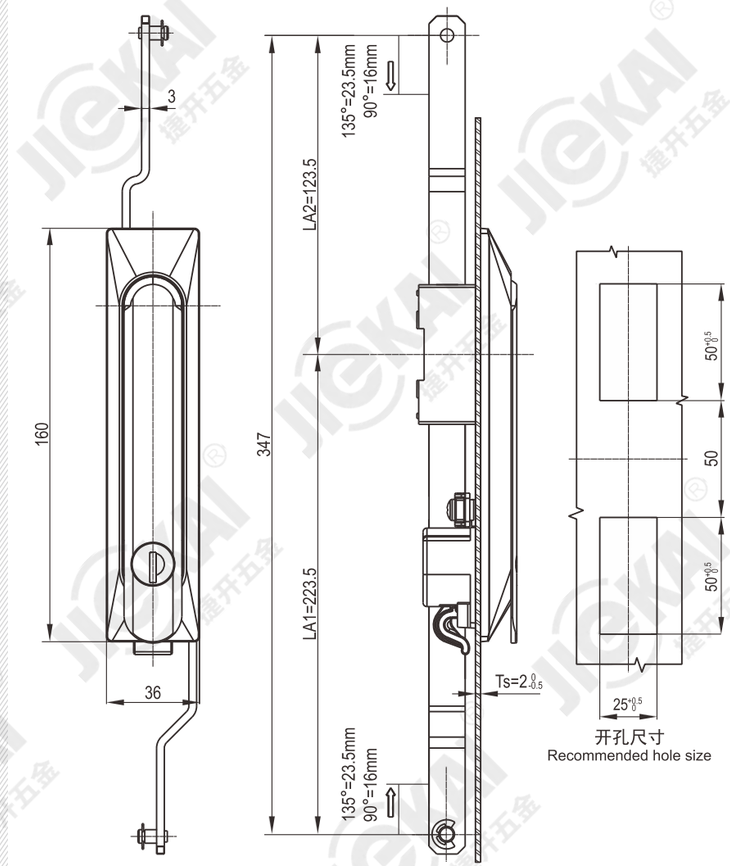

产品说明
Description

- 黑色PA塑料锁座，喷塑锌合金锁柄、转轴

Black PA body;zinc die handle powder coated, zinc die shaft and rod control,m.s. zinc plated flat rod

齿条连动型 Linkage for rack type	钢栓连动型 Linkage for cam type
LG113-2N1N-P2	LG113-3N1N-P2

LG114

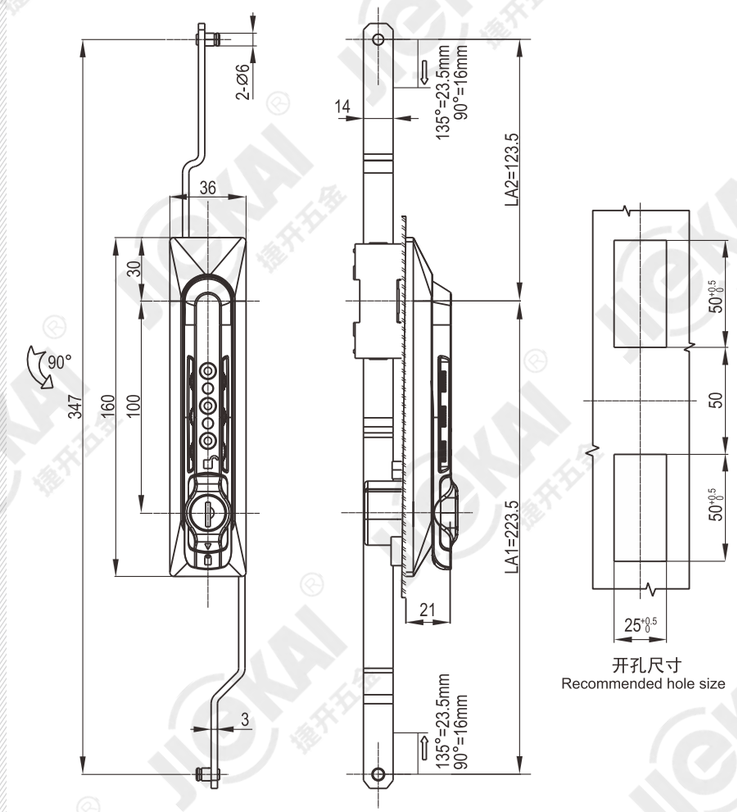

产品说明
Description

- 黑色PA塑料，锌合金锁柄装置，镀锌钢传动条

Black PA body,zinc die shaft and rod control zinc plated,m.s. zinc plated flat rod

齿条连动型 Linkage for rack type	钢栓连动型 Linkage for cam type
LG114-2N1N-P2	LG114-3N1N-P2

LG116系列

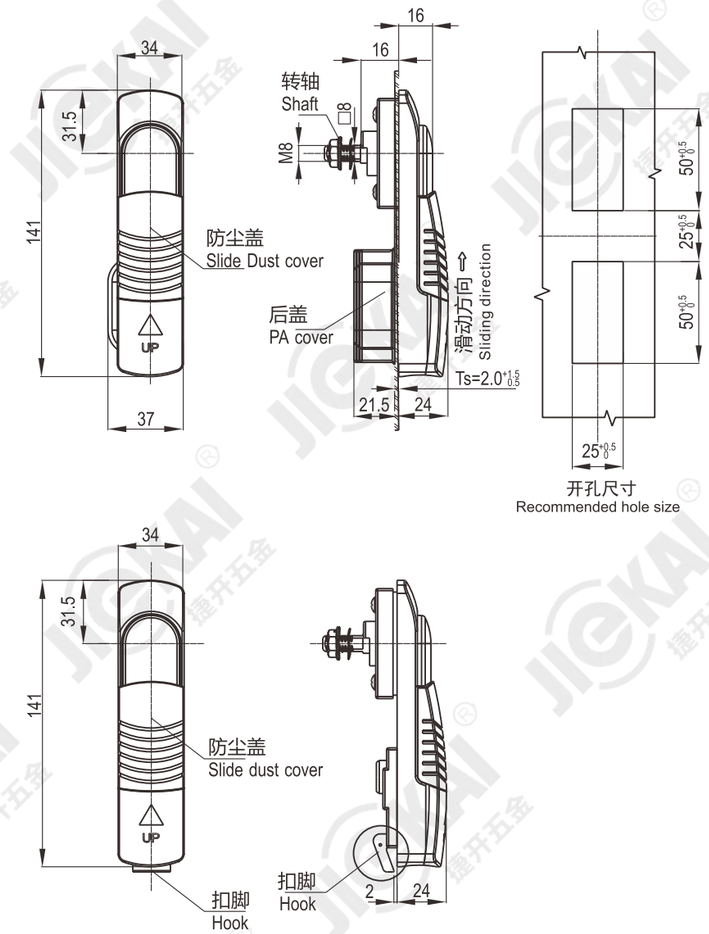

产品说明
Description

- 塑料锁座

Black PA 30% GF

安装方式 Mounting style	
螺丝安装 Mounting by cap	LG116-1Y1N-P2-001
卡式安装 Mounting by hook	LG116-1Y1N-P2-002

LG117系列

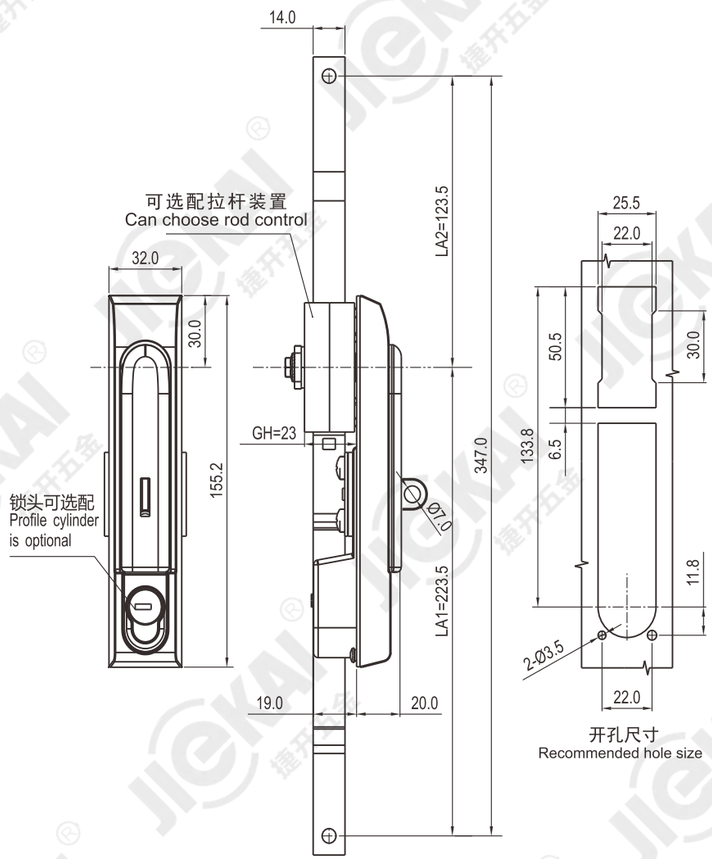

产品说明
Description

- 锌合金锁座，表面处理可做喷塑及电镀

Zinc die body, black powder coated or satin chrome plated.

齿条连动型 Linkage for rack type	钢栓连动型 Linkage for cam type
LG117-2N1N-P2	LG117-3N1N-P2
LG117-2N1Y-P2	LG117-3N1Y-P2

LG118系列

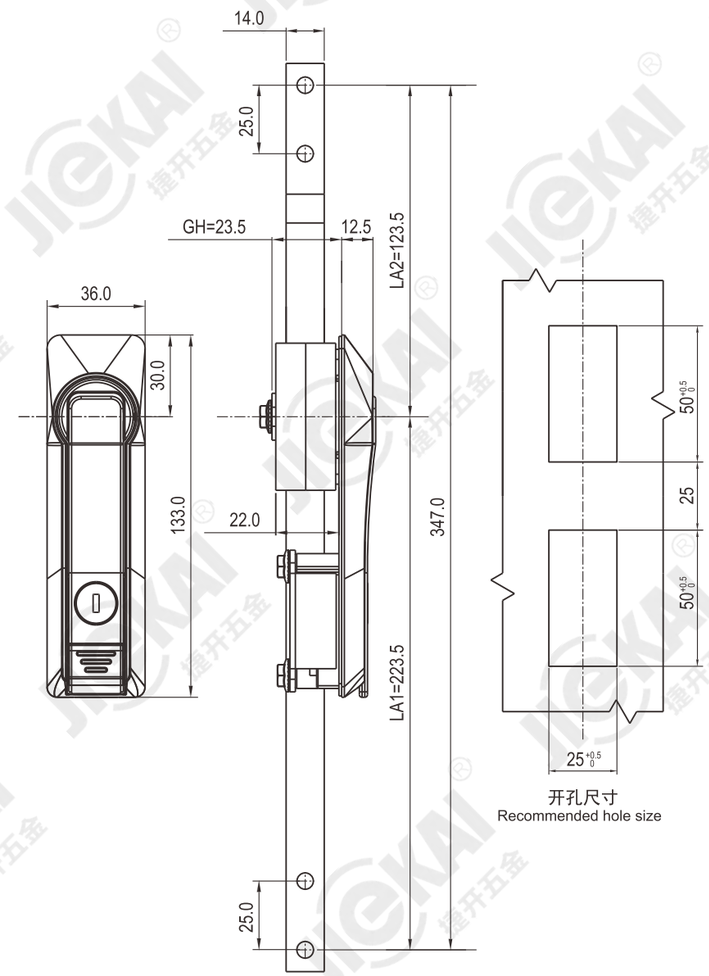

产品说明
Description

- 锌合金锁座，锌合金锁柄装置，锁座表面可做喷塑与电泳黑

Zinc die body and rod control, black powder coated or E-coated.

齿条连动型 Linkage for rack type	钢栓连动型 Linkage for cam type
LG118-2N1N-P2	LG118-3N1N-P2

LG122

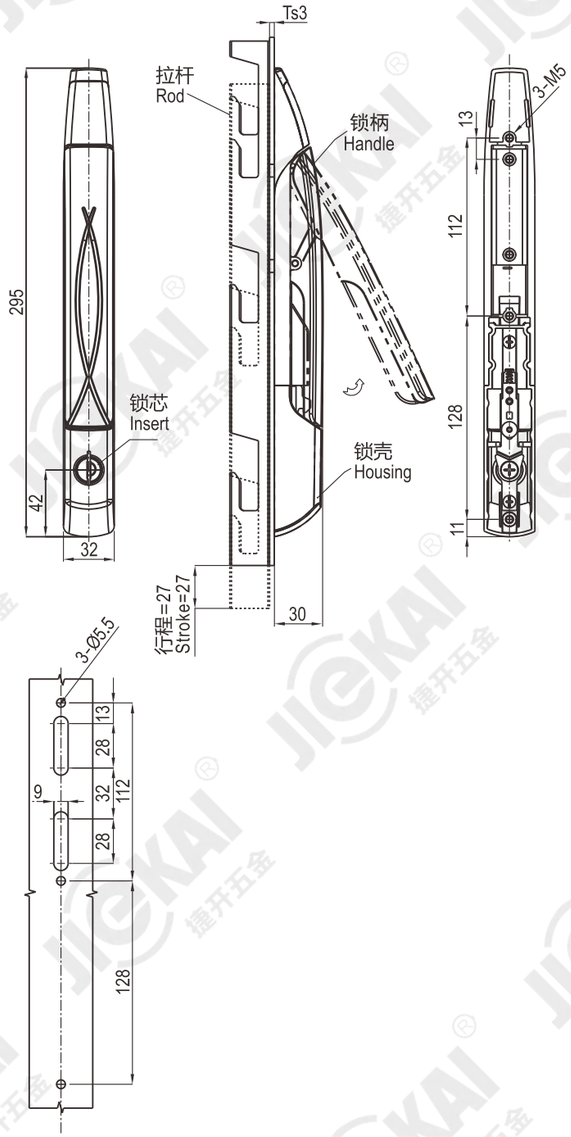

产品说明
Description

- 锌合金，不锈钢安装板、推板、挡板和销子，表面可做喷塑黑或者塑黄灰色

Zinc die,SUS mounting bracket,push plate,baffle plate and pin,black powder coated or yellowish grey powder coated.

开孔尺寸
Recommended hole size

产品型号 Product model	
LG122-2N1N-P2	LG122-2N1N-P5

电源锁 Key switch lock
转舌锁 Cam lock
圆柱锁 Quarter turn lock
连杆锁 Rob control lock
平面锁 Plane lock
把手锁 Handle lock
面板锁 Panel lock
拉手 Handles
限位 Door stop
外装铰链 External hinge
内装铰链 Internal hinge
搭扣 Toggle lock
密封条 Gasket
配件 Accessories

LG123系列

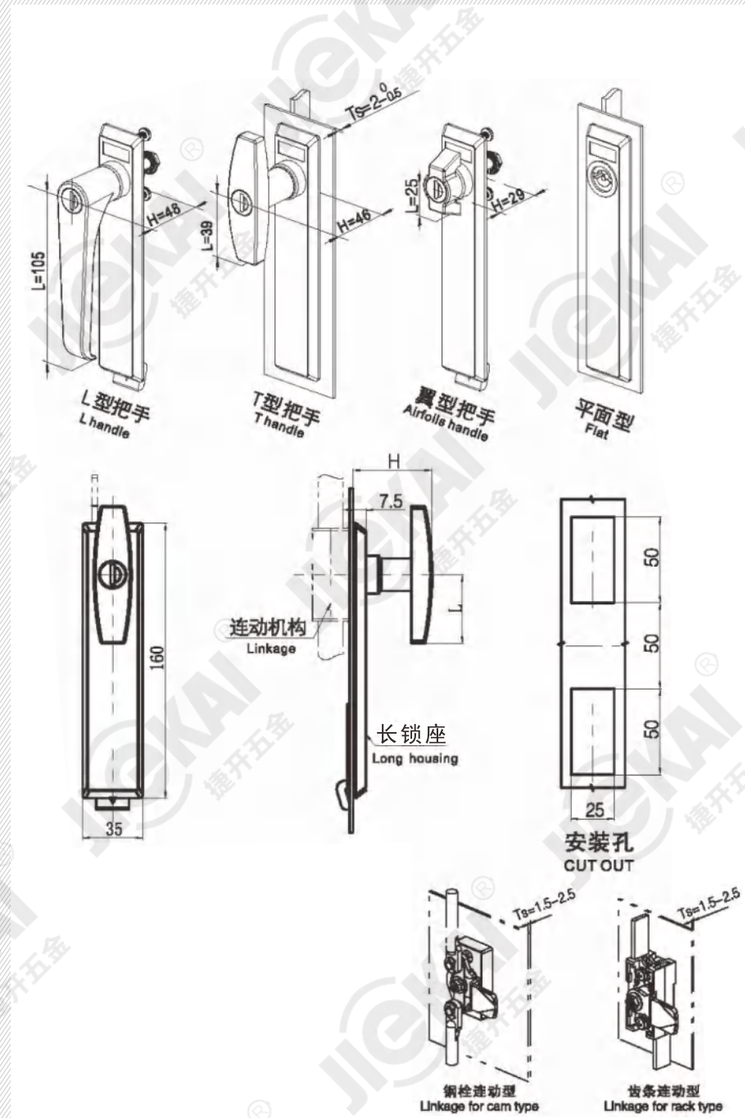

产品说明
Description

- 镀锌钢齿条，钢栓，锌合金镀锌传动壳锌合金黑色把手，黑色PA锁座

Galvanized steel rack and cam, zinc alloy galvanized transmission shell, zinc alloy black coated handle, black PA lock seat.

锁芯型号 Lock cylinder model	平面型 齿条连动 Flat linkage for rack	平面型 钢栓连动 Flat linkage for cam	翼型把手 齿条连动 Airfoils handle linkage for rack	翼型把手 钢栓连动 Airfoils handle linkage for cam	T型把手 齿条连动 T handle linkage for rack	T型把手 钢栓连动 T handle linkage for cam	L型把手 齿条连动 L handle linkage for rack	L型把手 钢栓连动 L handle linkage for cam
无锁芯 No lock cylinder			LG1231-2NON-P2	LG1231-3NON-P2	LG1232-2NON-P2	LG1232-3NON-P2	LG1233-2NON-P2	LG1233-3NON-P2
通配锁芯 With lock cylinder			LG1231-2N1N-P2	LG1231-3N1N-P2	LG1232-2N1N-P2	LG1232-3N1N-P2	LG1233-2N1N-P2	LG1233-3N1N-P2
翼型 4mm(Double Bit 4mm)	LG1234-2N2N-P2	LG1234-3N2N-P2						

LG124

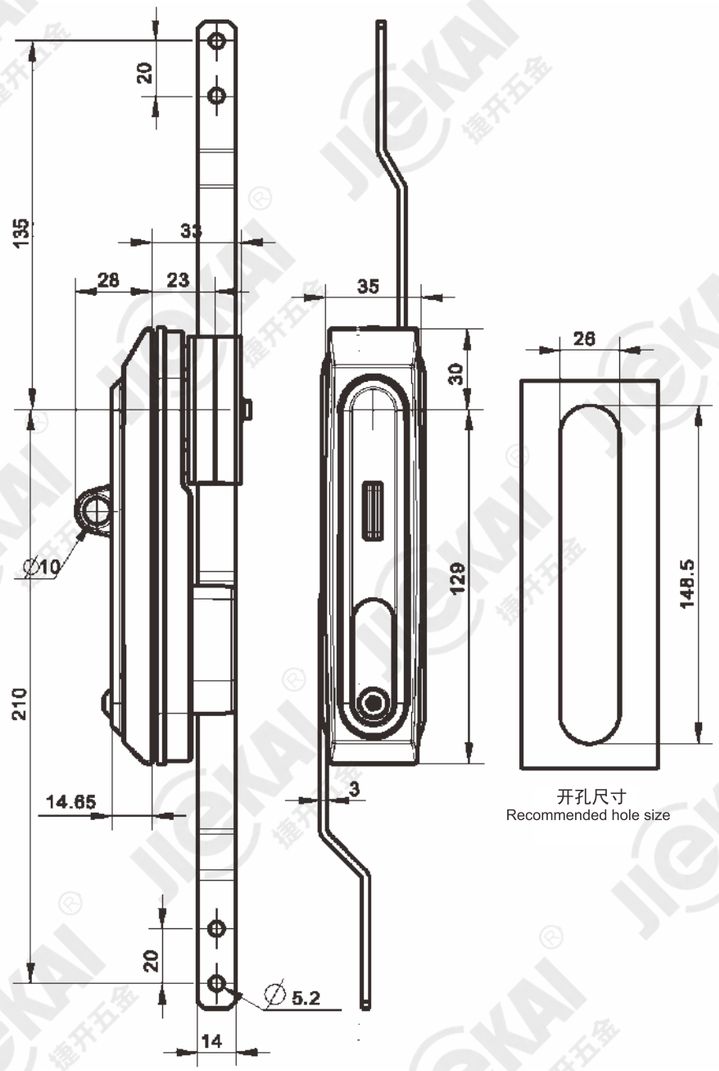

产品说明
Description

- 镀锌钢齿条，钢栓，锌合金黑色锁座，黑色PA压板

Galvanized steel rack and cam,zinc alloy black coated lock body,black PA platen.

齿条连动型 Linkage for rack type	
LG124-2Y1N-P2	LG124-2Y1Y-P2

LG125系列

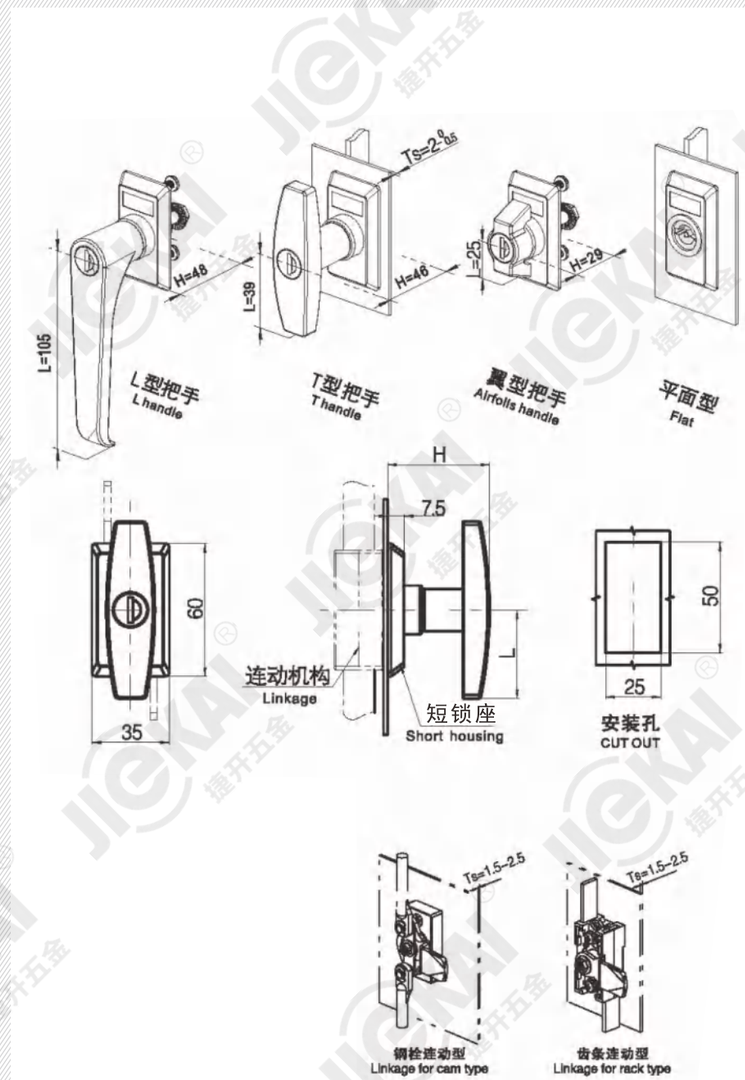

产品说明
Description

- 镀锌钢齿条，钢栓，锌合金镀锌传动壳锌合金黑色把手，黑色PA锁座

Galvanized steel rack and cam,zinc alloy galvanized transmission shell,zinc alloy black coated handle, black PA panel seat.

锁芯型号 Lock cylinder model	平面型 齿条连动 Flat linkage for rack	平面型 钢栓连动 Flat linkage for cam	翼型把手 齿条连动 Airfoils handle linkage for rack	翼型把手 钢栓连动 Airfoils handle linkage for cam	T型把手 齿条连动 T handle linkage for rack	T型把手 钢栓连动 T handle linkage for cam	L型把手 齿条连动 L handle linkage for rack	L型把手 钢栓连动 L handle linkage for cam
无锁芯 No lock cylinder			LG1251-2NON-P2	LG1251-3NON-P2	LG1252-2NON-P2	LG1252-3NON-P2	LG1253-2NON-P2	LG1253-3NON-P2
通配锁芯 With lock cylinder			LG1251-2N1N-P2	LG1251-3N1N-P2	LG1252-2N1N-P2	LG1252-3N1N-P2	LG1253-2N1N-P2	LG1253-3N1N-P2
翼型 4mm(Double Bit 4mm)	LG1254-2N2N-P2	LG1254-3N2N-P2						

LG126

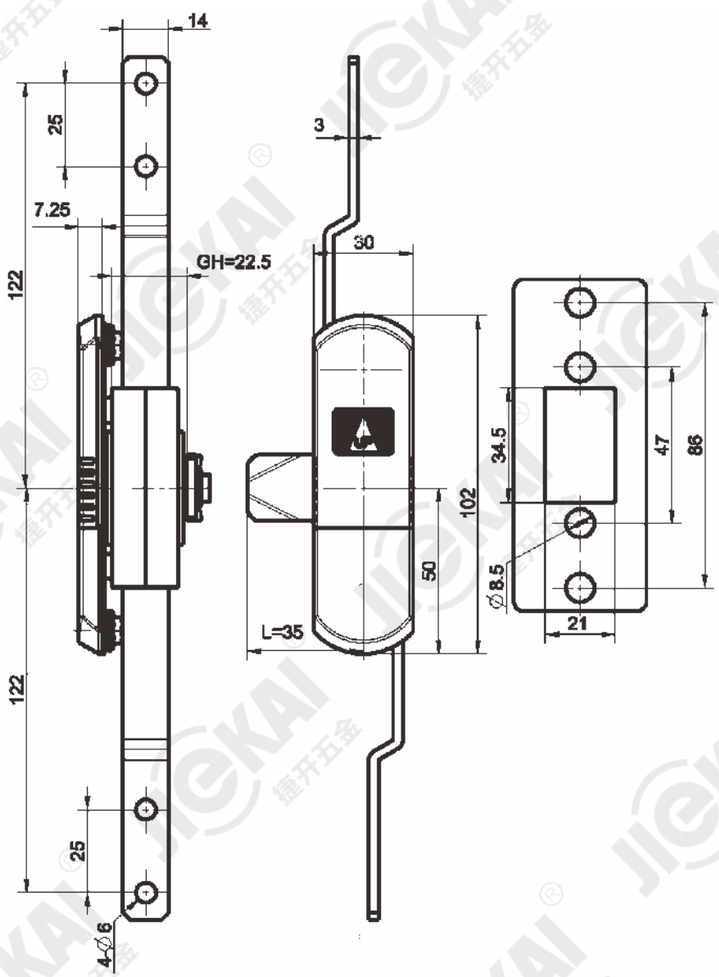

产品说明
Description

- 镀锌钢齿条，钢栓，锌合金镀锌传动壳
  锌合金银灰喷漆锁座

Galvanized steel rack and cam,zinc alloy galvanized transmission shell,zinc alloy silver coated lock body.

锁芯型号 Lock cylinder model	锌合金，亚光 Zinc alloy, silver color coated
翼型 4mm(Double Bit 4mm)	LG126-2Y2N-PO
四方锁芯 8mm(Square 8mm)	LG126-2Y4N-PO
三角锁芯 8mm(Triangular 8mm)	LG126-2Y3N-PO

电源锁 Key switch lock
转舌锁 Cam lock
圆柱锁 Quarter turn lock
连杆锁 Rob control lock
平面锁 Plane lock
把手锁 Handle lock
面板锁 Panel lock
拉手 Handles
限位 Door stop
外装铰链 External hinge
内装铰链 Internal hinge
搭扣 Toggle lock
密封条 Gasket
配件 Accessories

LG127

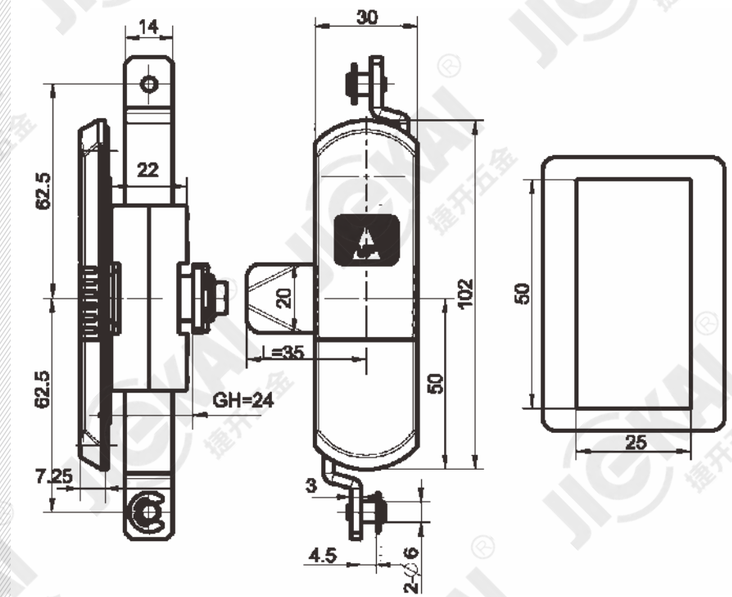

产品说明
Description

- 镀锌钢齿条，钢栓，锌合金镀锌传动壳
  锌合金银灰喷漆锁座

Galvanized steel rack and cam,zinc alloy galvanized transmission shell,zinc alloy silver coated lock body.

锁芯型号 Lock cylinder model	锌合金，亚光 Zinc alloy, silver color coated
翼型 4mm(Double Bit 4mm)	LG127-2Y2N-PO
四方锁芯 8mm(Square 8mm)	LG127-2Y4N-PO
三角锁芯 8mm(Triangular 8mm)	LG127-2Y3N-PO

LG128

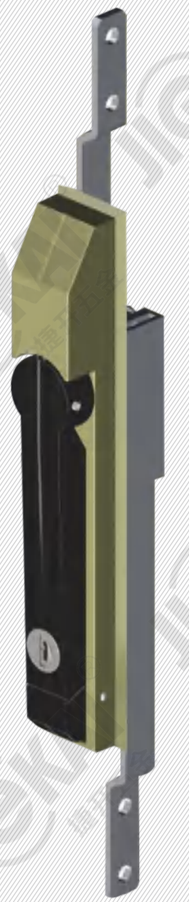

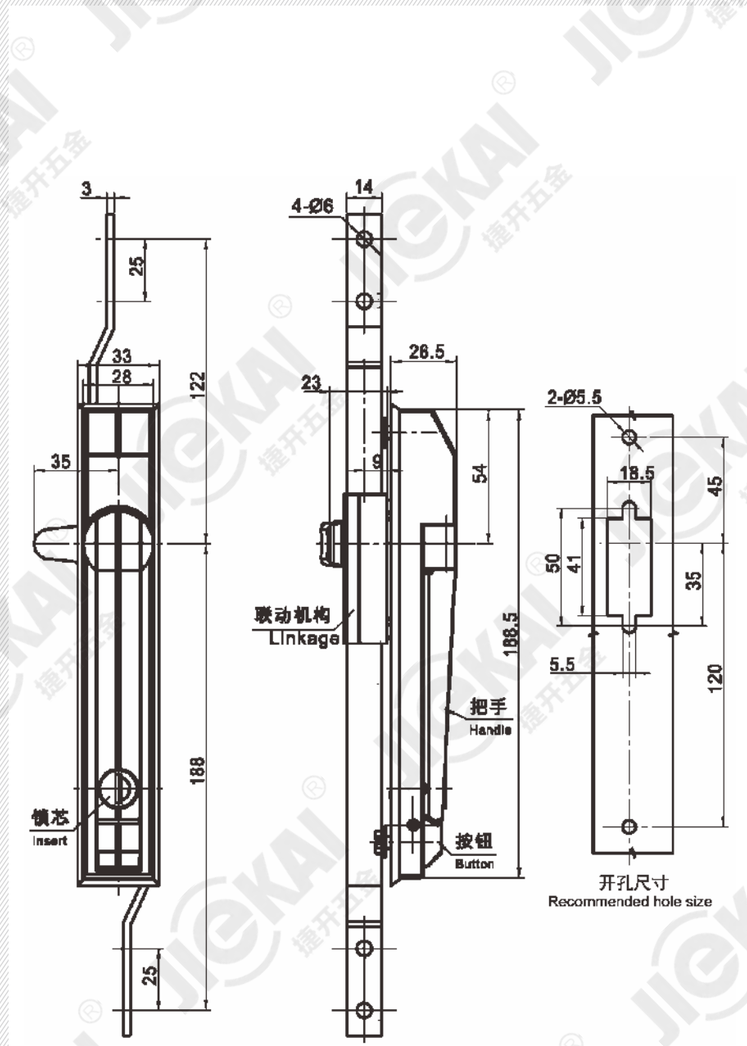

产品说明
Description

- 镀锌钢齿条，钢栓，锌合金镀锌传动壳锌合金黑色锁柄，黄灰锁座，不锈钢挂锁扣

Galvanized steel rack and cam,zinc alloy galvanized transmission shell,zinc alloy black coated handle. Yellow grey base,stainless steel padlock buckle.

齿条连动型 Linkage for rack type	
LG128-2N1N-PO	LG128-2N1Y-PO

LG129系列

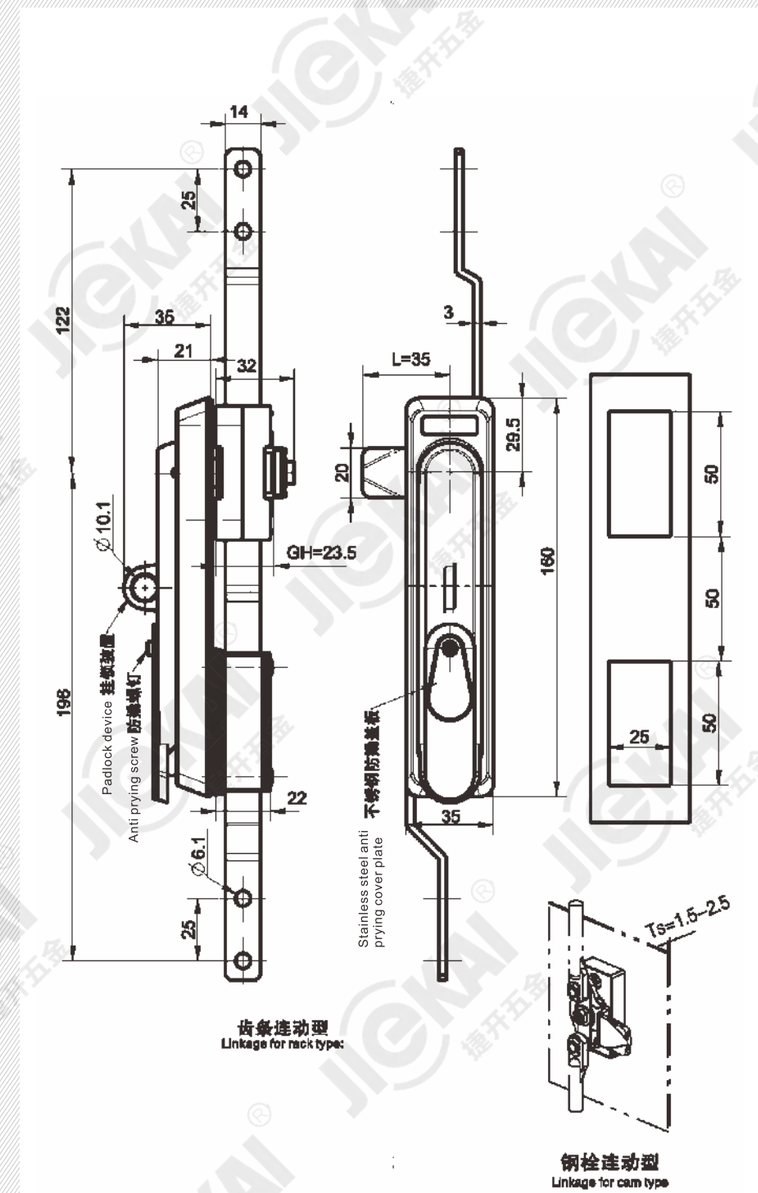

产品说明
Description

- 镀锌钢齿条，钢栓，锌合金镀锌传动壳锌合金黑色锁座，不锈钢挂锁扣

Galvanized steel rack and cam,zinc alloy galvanized transmission shell,zinc alloy black coated lock body stainless steel padlock buckle.

齿条连动型 Linkage for rack type		钢栓连动型 Linkage for cam type	
LG129-2Y1N-P2	LG129-2Y1Y-P2	LG129-3Y1N-P2	LG129-3Y1Y-P2

LG129S

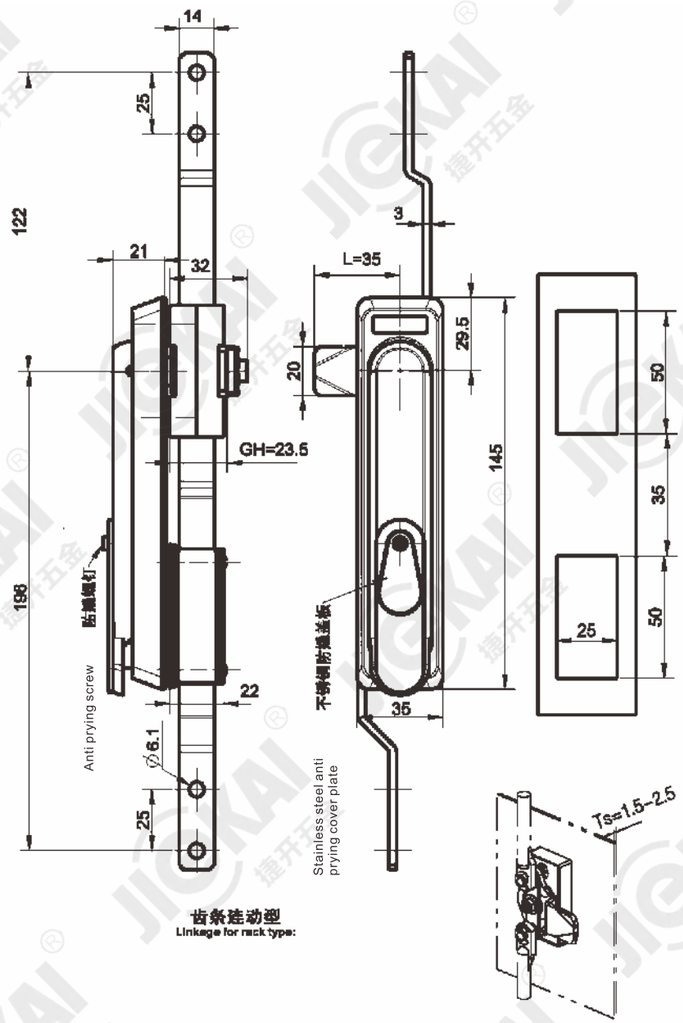

产品说明
Description

- 镀锌钢齿条，钢栓，锌合金镀锌传动壳锌合金黑色锁座，不锈钢挂锁扣

Galvanized steel rack and cam,zinc alloy galvanized transmission shell,zinc alloy black coated lock body stainless steel padlock buckle.

齿条连动型 Linkage for rack type	钢栓连动型 Linkage for cam type
LG129S-2Y1N-P2	LG129S-3Y1N-P2

电源锁 Key switch lock
转舌锁 Cam lock
圆柱锁 Quarter turn lock
连杆锁 Rob control lock
平面锁 Plane lock
把手锁 Handle lock
面板锁 Panel lock
拉手 Handles
限位 Door stop
外装铰链 External hinge
内装铰链 Internal hinge
搭扣 Toggle lock
密封条 Gasket
配件 Accessories

LG130

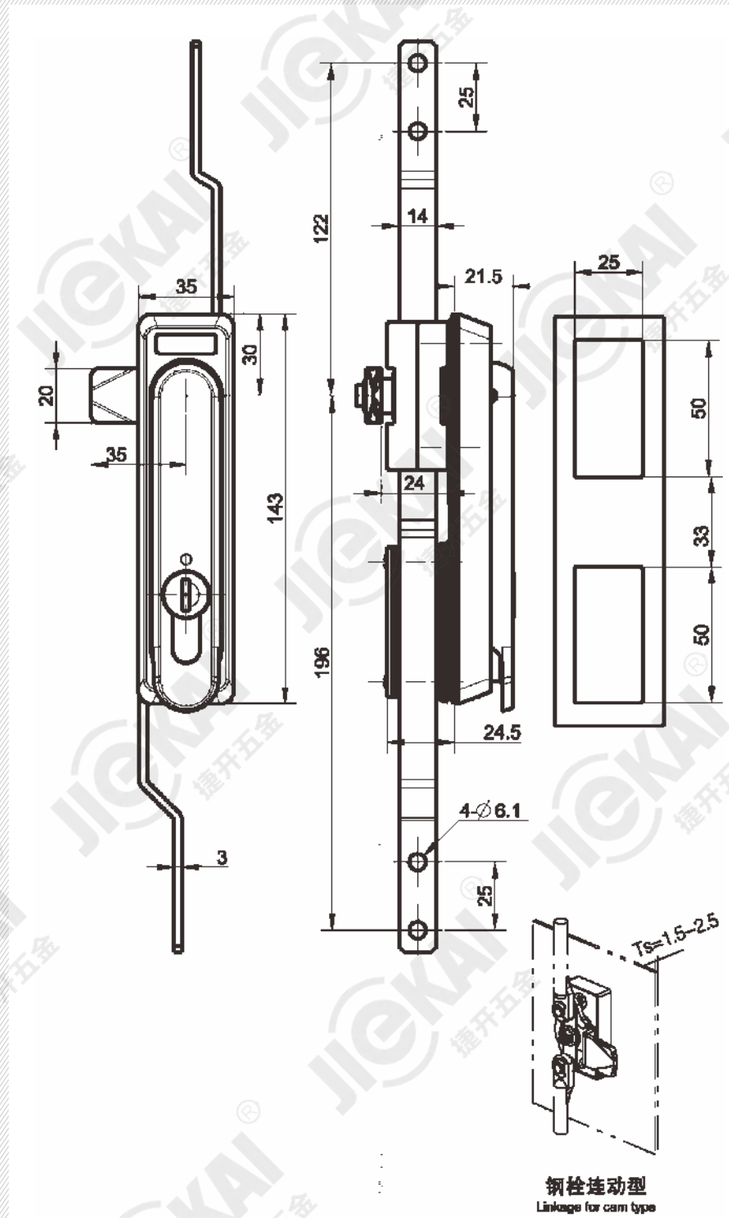

产品说明
Description

- 镀锌钢齿条，钢栓，锌合金镀锌传动壳锌合金黑色锁座，不锈钢挂锁扣

Galvanized steel rack and cam,zinc alloy galvanized transmission shell,zinc alloy black coated lock body stainless steel padlock buckle.

齿条连动型 Linkage for rack type		钢栓连动型 Linkage for cam type	
LG130-2N1N-P2	LG130-2N1Y-P2	LG130-3N1N-P2	LG130-3N1Y-P2

LG131

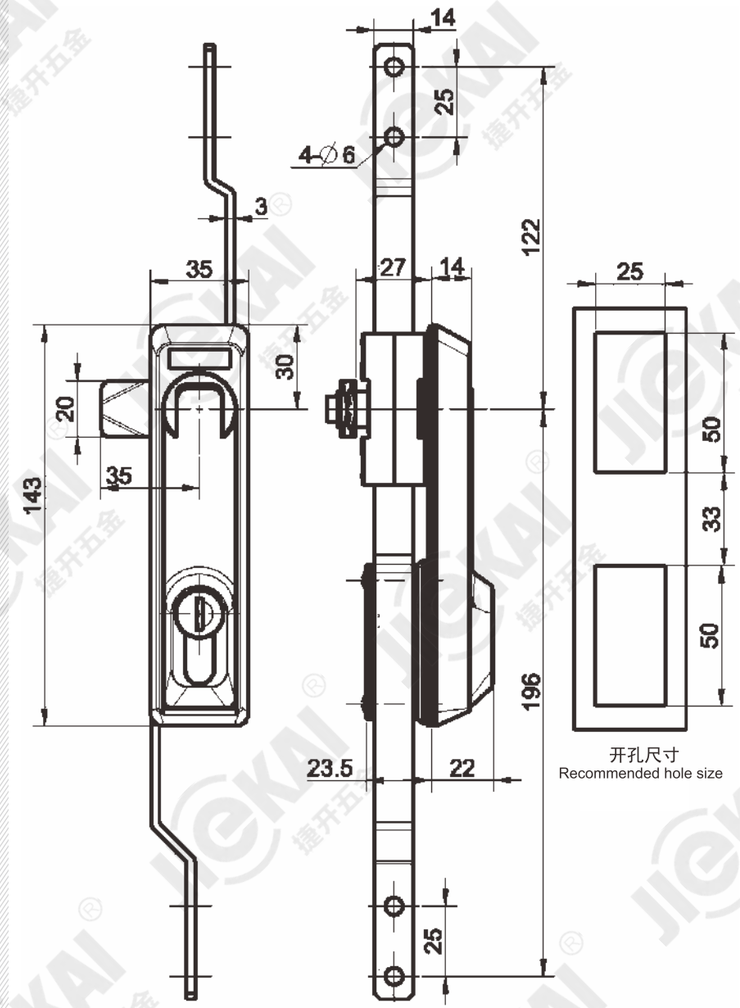

产品说明
Description

- 镀锌钢齿条，钢栓，锌合金镀锌传动壳不锈钢锁座，黑色PA后盖

Galvanized steel rack and cam,zinc alloy galvanized transmission shell,stainless steel lock body,black PA back cover

产品型号 Product model
SC131-2N1N-XX

LG132

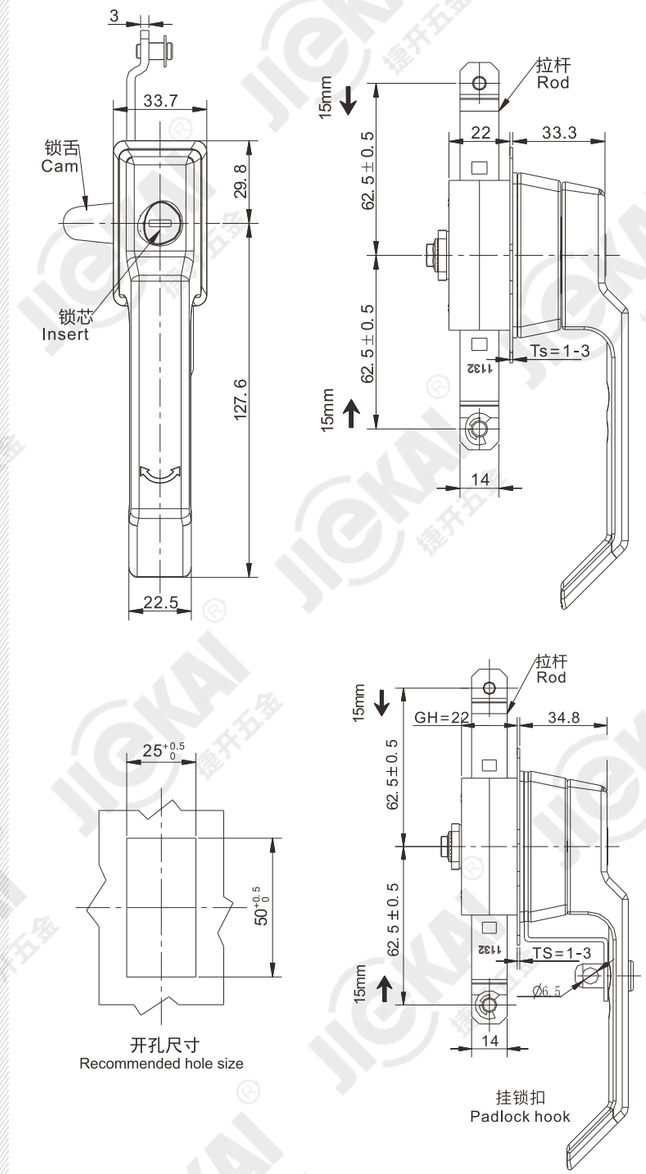

产品说明
Description

- 锌合金把手，锁座，喷塑亚光黑；拉杆，锁舌：三价彩锌

Handle，lock seat:Zinc alloy,Black smooth powder coated; Rod,Cam:Q235,Trivalent chromate zinc plated

产品型号 Product model	
LG132-2N1Y-P1	LG132-2N1N-P1

LG133系列

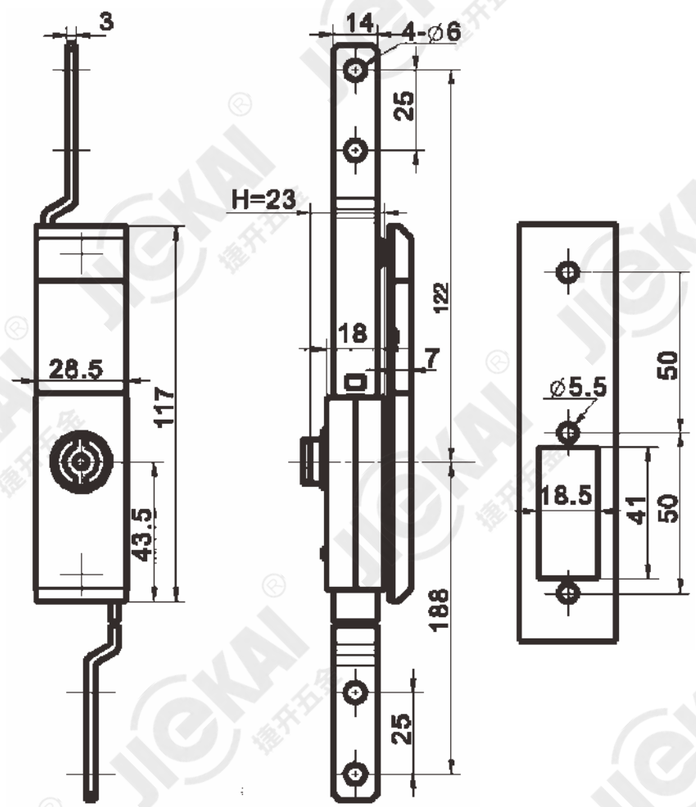

产品说明
Description

- 镀锌钢齿条，钢栓，锌合金镀锌传动壳 ABS锁座

Galvanized steel rack and cam,zinc alloy galvanized transmission shell, ABS lock seat.

锁芯型号 Lock cylinder model	塑料面板，锌合金锁芯 Zinc alloy, silver color coated
翼型 4mm(Double Bit 4mm)	LG133-2N2N-XX
四方锁芯 8mm(Square 8mm)	LG133-2N4N-XX
三角锁芯 8mm(Triangular 8mm)	LG133-2N3N-XX

电源锁 Key switch lock
转舌锁 Cam lock
圆柱锁 Quarter turn lock
连杆锁 Rob control lock
平面锁 Plane lock
把手锁 Handle lock
面板锁 Panel lock
拉手 Handles
限位 Door stop
外装铰链 External hinge
内装铰链 Internal hinge
搭扣 Toggle lock
密封条 Gasket
配件 Accessories

LG134系列

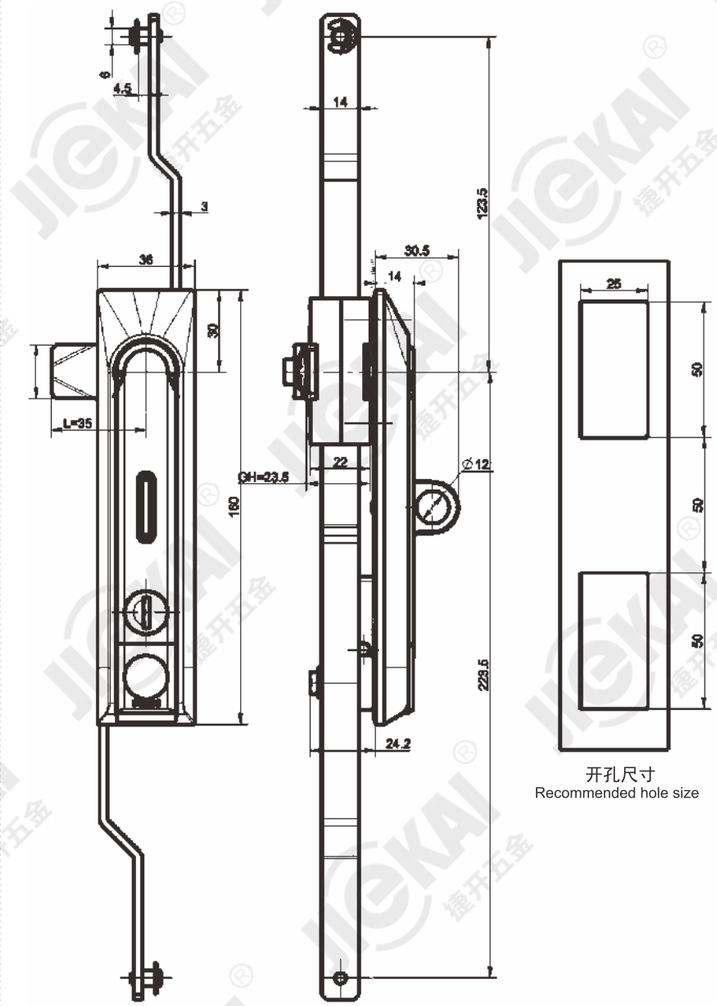

产品说明
Description

- 镀锌钢齿条，钢栓，锌合金镀锌传动壳 锌合金黑色锁座，不锈钢挂锁扣

Galvanized steel rack and cam,zinc alloy galvanized transmission shell,zinc alloy black coated lock body stainless steel padlock buckle.

齿条连动型 Linkage for rack type	钢栓连动型 Linkage for cam type	齿条连动型 Linkage for rack type	钢栓连动型 Linkage for cam type
LG134-2N1N-P2	LG134-3N1N-P2	LG134-2N1Y-P2	LG134-3N1Y-P2

LG135/135S

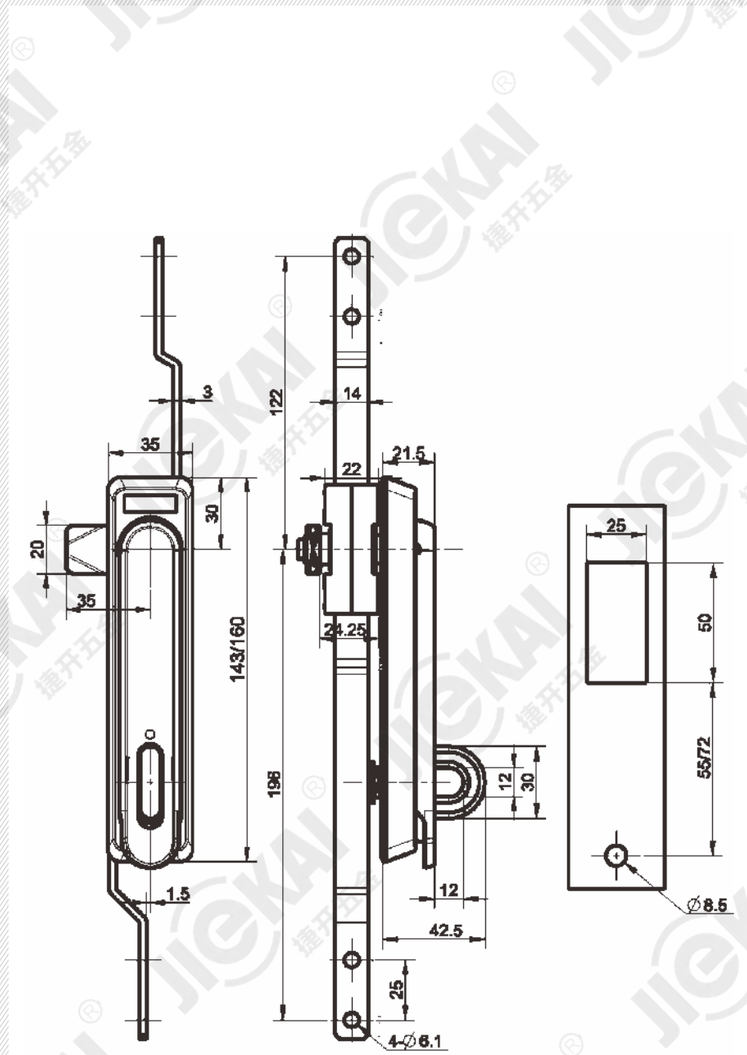

产品说明
Description

- 镀锌钢齿条，钢栓，锌合金镀锌传动壳锌合金黑色锁座，锌合金镀铬挂锁扣

Galvanized steel rack and cam,zinc alloy galvanized transmission shell,zinc alloy black coated lock body zinc alloy chrome plated padlock buckle.

短款 A=143,B=55 Short type	长款 A=160,B=72 Long type
LG135-2NOY-P2	LG135S-2NOY-P2

电源锁 Key switch lock
转舌锁 Cam lock
圆柱锁 Quarter turn lock
连杆锁 Rob control lock
平面锁 Plane lock
把手锁 Handle lock
面板锁 Panel lock
拉手 Handles
限位 Door stop
外装铰链 External hinge
内装铰链 Internal hinge
搭扣 Toggle lock
密封条 Gasket
配件 Accessories

LG150系列

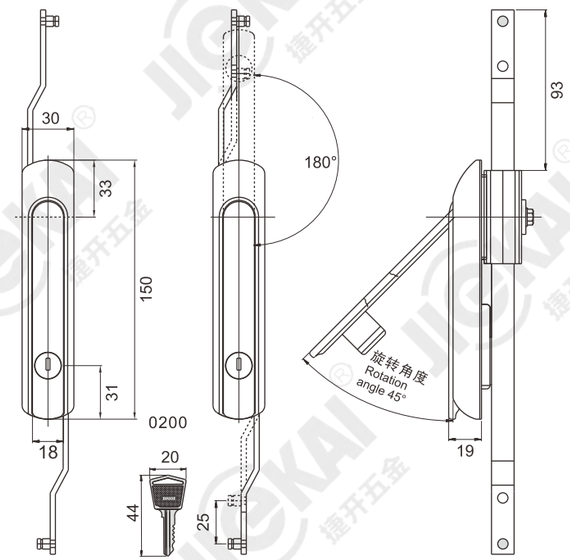

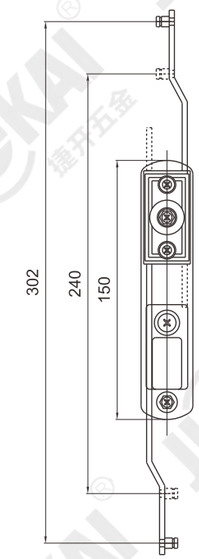

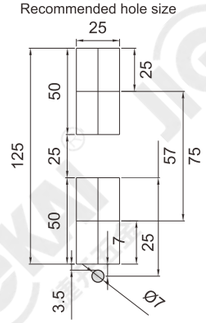

产品说明
Description

- 锌合金锁座、锁柄镀铬-光面，喷砂涂装黑色耐刮面（砂黑）

Zinc alloy lock seat 、lock handle chrome plated-silver, aventurine coated black (surface for resistance scrape)

齿条连动型 Linkage for rack type	钢栓连动型 Linkage for cam type
LG150-2N1N-E1	LG150-2N1N-P1
LG150-2N1Y-E1	LG150-2N1Y-P1

LG153/154

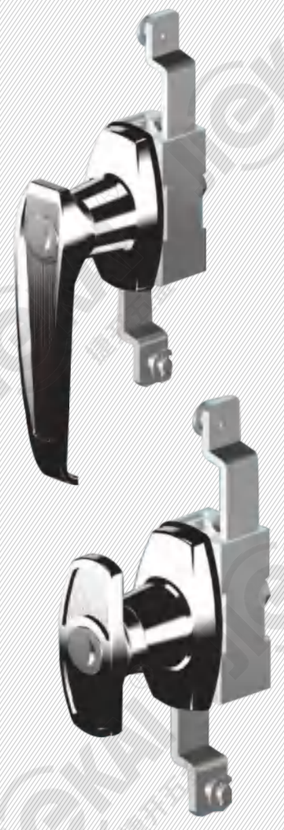

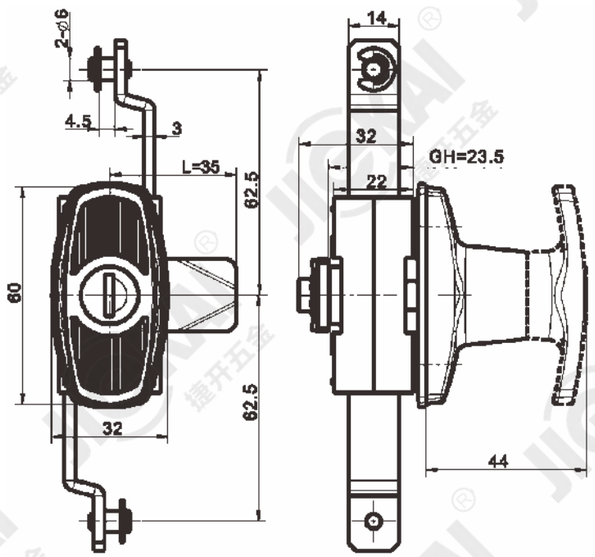

齿条连动型
Linkage for rack type

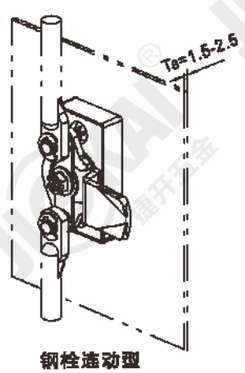

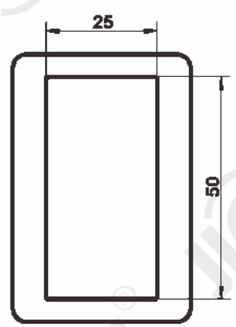

钢栓连动型
Linkage for cam type

产品说明
Description

- 镀锌钢齿条，钢栓，锌合金镀锌传动壳
  锌合金镀铬锁座

Galvanized steel rack and cam,zinc alloy galvanized transmission shell,zinc alloy chrome-plated lock body

锁芯型号 Lock cylinder model	锁合金，L型把手，标准型 Zinc alloy, L handle, standard		锁合金，L型把手，挂锁型 Zinc alloy, L handle, padlock		锁合金，T型把手 Zinc alloy, T handle	
	齿条连动型 Linkage for rack type	钢栓连动型 Linkage for cam type	齿条连动型 Linkage for rack type	钢栓连动型 Linkage for cam type	齿条连动型 Linkage for rack type	钢栓连动型 Linkage for cam type
无锁芯 No lock cylinder	LG153-2NON-E1	LG153-3NON-E1	LG153-2NOY-E1	LG153-3NOY-E1	LG154-2NON-E1	LG154-3NON-E1
通配锁芯 With lock cylinder	LG153-2N1N-E1	LG153-3N1N-E1	LG153-2N1Y-E1	LG153-3N1Y-E1	LG154-2N1N-E1	LG154-3N1N-E1

电源锁 Key switch lock
转舌锁 Cam lock
圆柱锁 Quarter turn lock
连杆锁 Rob control lock
平面锁 Plane lock
把手锁 Handle lock
面板锁 Panel lock
拉 手 Handles
限 位 Door stop
外装铰链 External hinge
内装铰链 Internal hinge
搭 扣 Toggle lock
密封条 Gasket
配 件 Accessories

LG161

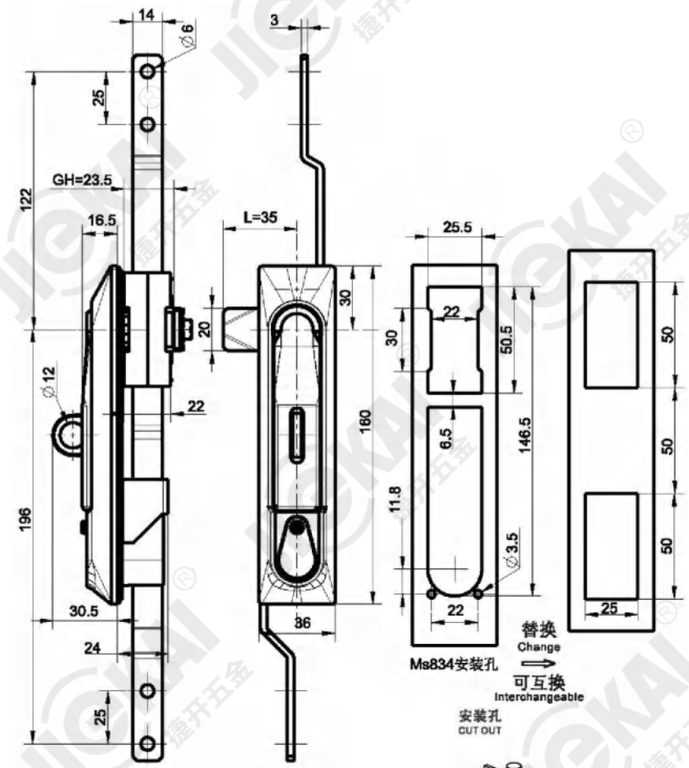

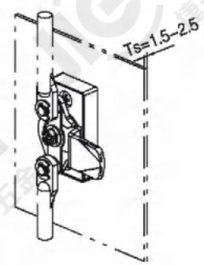

钢栓连动型
Linkage for cam type

产品说明
Description

- 镀锌钢齿条，钢栓，锌合金镀锌传动壳
  锌合金黑色锁座，不锈钢挂锁扣

Galvanized steel rack and cam,zinc alloy galvanized transmission shell,zinc alloy black coated lock body stainless steel padlock buckle.

齿条连动型 Linkage for rack type		钢栓连动型 Linkage for cam type	
LG161-2Y1N-P2	LG161-2Y1Y-P2	LG161-3Y1N-P2	LG161-3Y1Y-P2

LG173-LG174

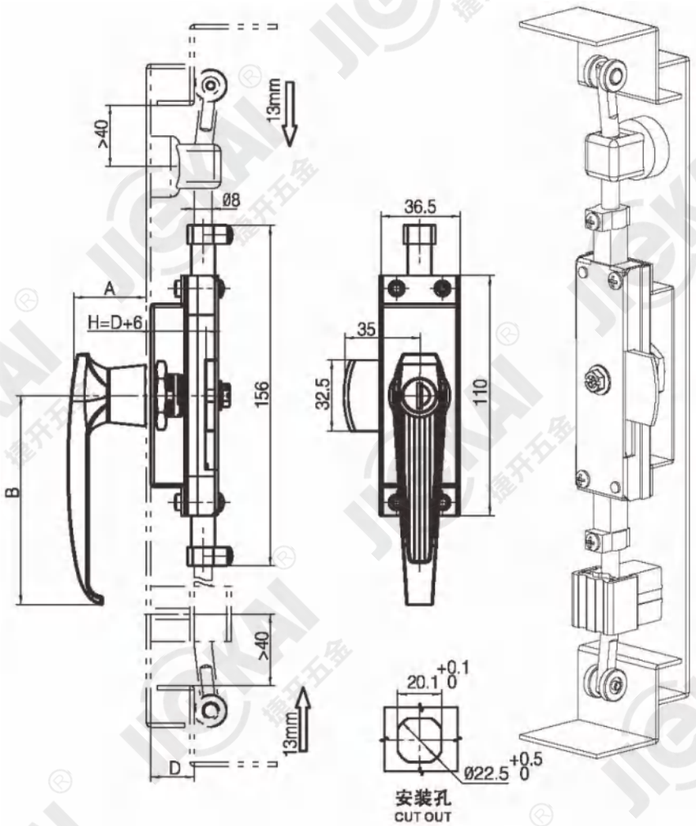

产品说明
Description

◆ 镀锌钢钢栓，传动壳，锌合金镀铬锁座

Galvanized steel rack and cam,zinc alloy galvanized transmission shell,zinc alloy chrome-plated lock body

锁芯型号 Lock cylinder model	L型把手，标准型，A=33,B=96 L handle, standard		L型把手，挂锁型，A=33,B=96 L handle, padlock		T型把手，A=33,B=30 T handle	
	D=20	D=26	D=20	D=26	D=20	D=26
无锁芯 No lock cylinder	LG1731-1NON-E1	LG1732-1NON-E1	LG1731-1NOY-E1	LG1732-1NOY-E1	LG1741-1NON-E1	LG1742-1NON-E1
通配锁芯 With lock cylinder	LG1731-1N1N-E1	LG1732-1N1N-E1	LG1731-1N1Y-E1	LG1732-1N1Y-E1	LG1741-1N1N-E1	LG1742-1N1N-E1

电源锁 Key switch lock
转舌锁 Cam lock
圆柱锁 Quarter turn lock
连杆锁 Rob control lock
平面锁 Plane lock
把手锁 Handle lock
面板锁 Panel lock
拉手 Handles
限位 Door stop
外装铰链 External hinge
内装铰链 Internal hinge
搭扣 Toggle lock
密封条 Gasket
配件 Accessories

LG175

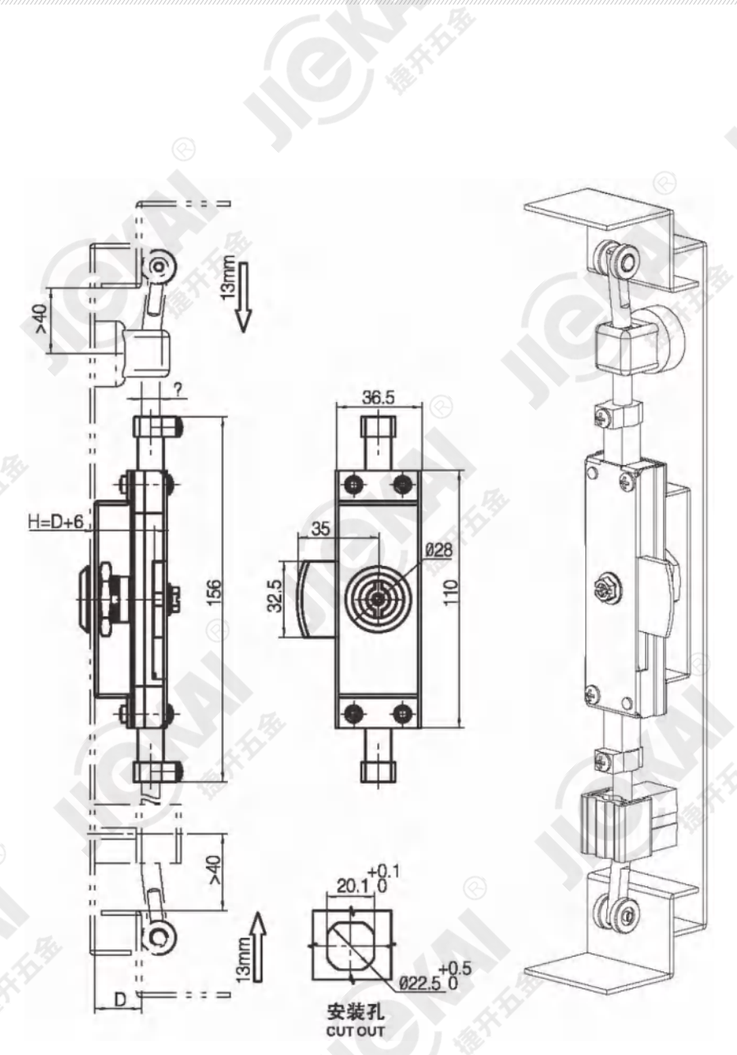

产品说明
Description

◆ 镀锌钢钢栓，传动壳，锌合金镀铬锁座

Galvanized steel cam,transmission shell,zinc alloy chrome-plated lock body

锁芯型号 Lock cylinder model	D=20	D=26
翼型 4mm(Double Bit 4mm)	LG1751-1N2N-E1	LG1752-1N2N-E1
四方锁芯 8mm(Square 8mm)	LG1751-1N4N-E1	LG1752-1N4N-E1
三角锁芯 8mm(Triangular 8mm)	LG1751-1N3N-E1	LG1752-1N3N-E1

LG181系列

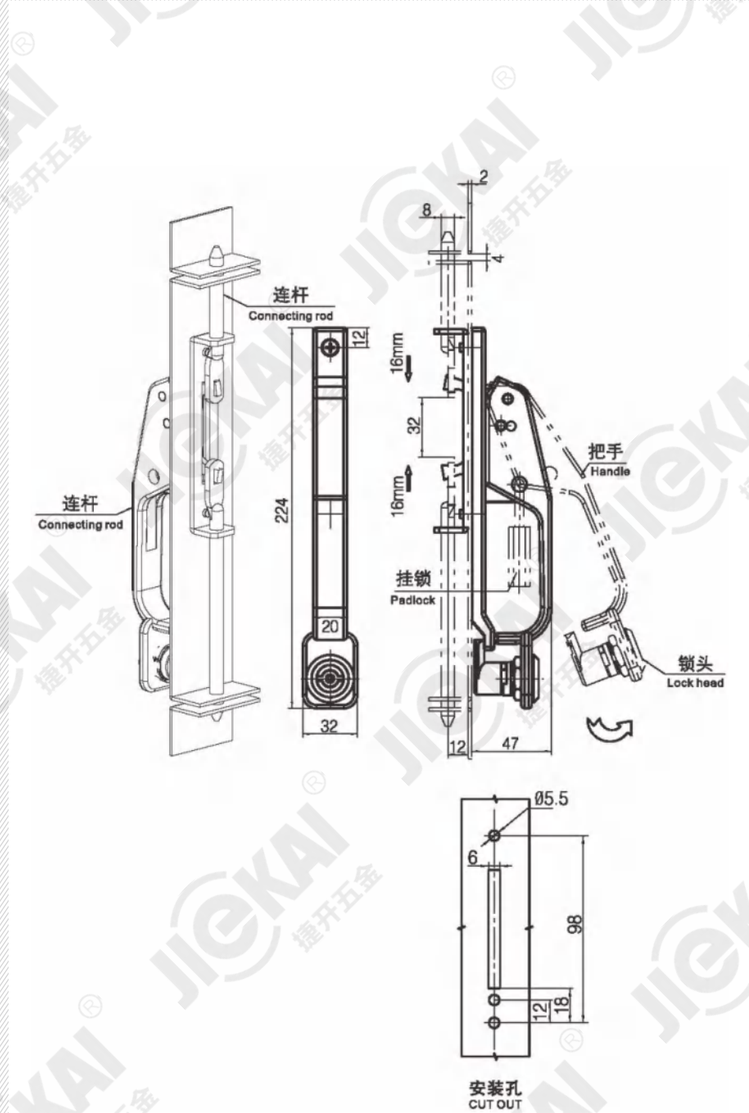

产品说明
Description

◆ 锌合金锁座，镀锌钢导向座

Zinc alloy lock body, galvanized steel guide seal

锁芯型号 Lock cylinder model	锌合金 Zinc alloy
无锁芯 No lock cylinder	LG181-1NOY-P2
通配锁芯 With lock cylinder	LG181-1N1Y-P2
翼型 4mm(Double Bit 4mm)	LG181-1N2Y-P2

电源锁 Key switch lock
转舌锁 Cam lock
圆柱锁 Quarter turn lock
连杆锁 Rob control lock
平面锁 Plane lock
把手锁 Handle lock
面板锁 Panel lock
拉手 Handles
限位 Door stop
外装铰链 External hinge
内装铰链 Internal hinge
搭扣 Toggle lock
密封条 Gasket
配件 Accessories

LG190系列

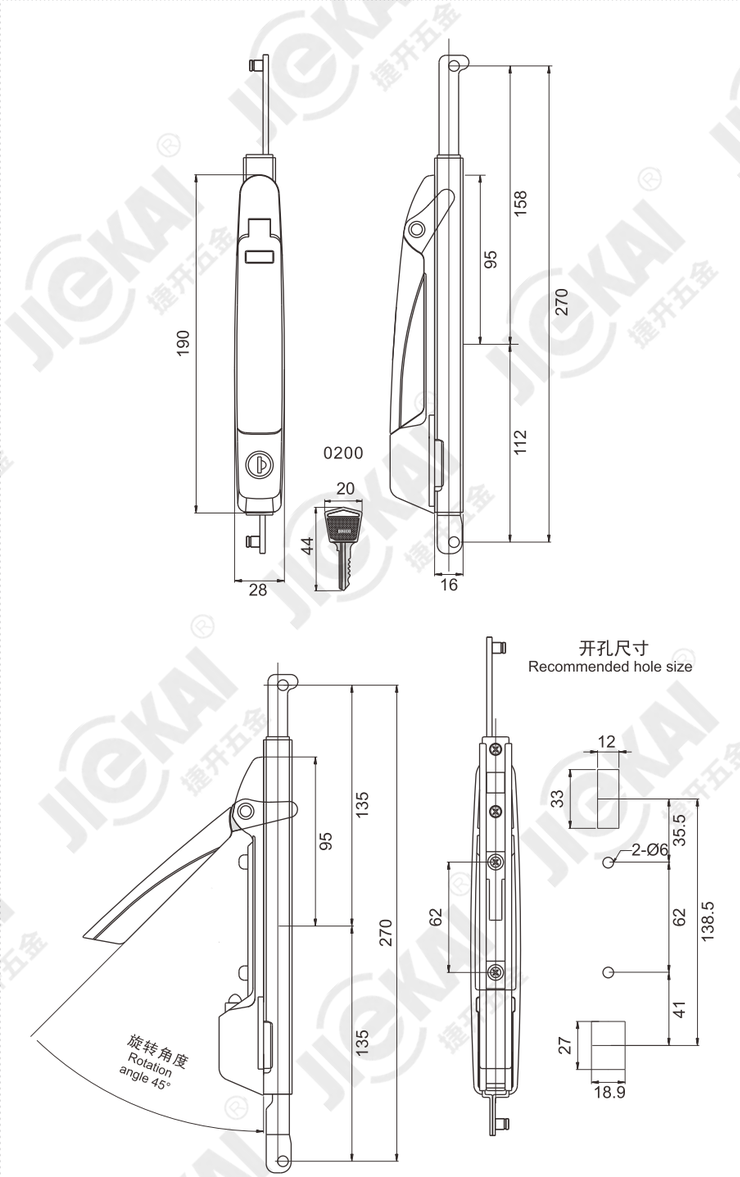

产品说明
Description

◆ 锌合金锁座、锁柄，不锈钢挂锁扣，喷砂涂装水雾色-耐刮面，喷砂涂装水黑色-耐刮面

Zinc alloy ,lock seat 、 lock handle，stainless steel padlock buckle. chrome planting-fume(With granule substance and scrape resistance surface) electroplate black-sand blasting(With granule substance and scrape resistance surface)

齿条连动型 Linkage for rack type	钢栓连动型 Linkage for cam type
LG190-3N1N-E1	LG190-3N1Y-E1
LG190-3N1N-P1	LG190-3N1Y-P1

LG191

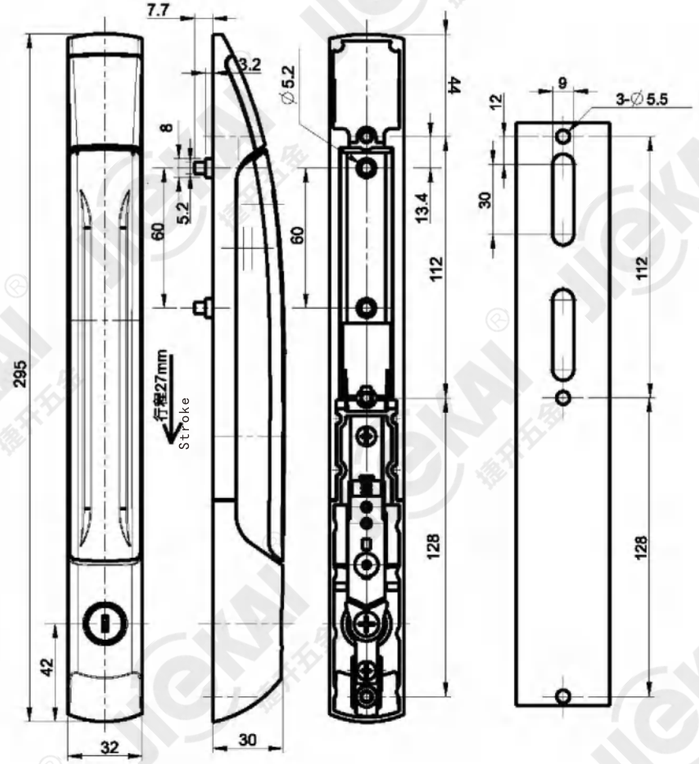

产品说明
Description

◆ 锌合金灰黄锁座、锁柄
Zinc alloy gray-yellow lock body、lock handle

产品型号 Product model
LG191-3N1N-XX（7034）

电源锁 Key switch lock
转舌锁 Cam lock
圆柱锁 Quarter turn lock
连杆锁 Rob control lock
平面锁 Plane lock
把手锁 Handle lock
面板锁 Panel lock
拉手 Handles
限位 Door stop
外装铰链 External hinge
内装铰链 Internal hinge
搭扣 Toggle lock
密封条 Gasket
配件 Accessories

LG193

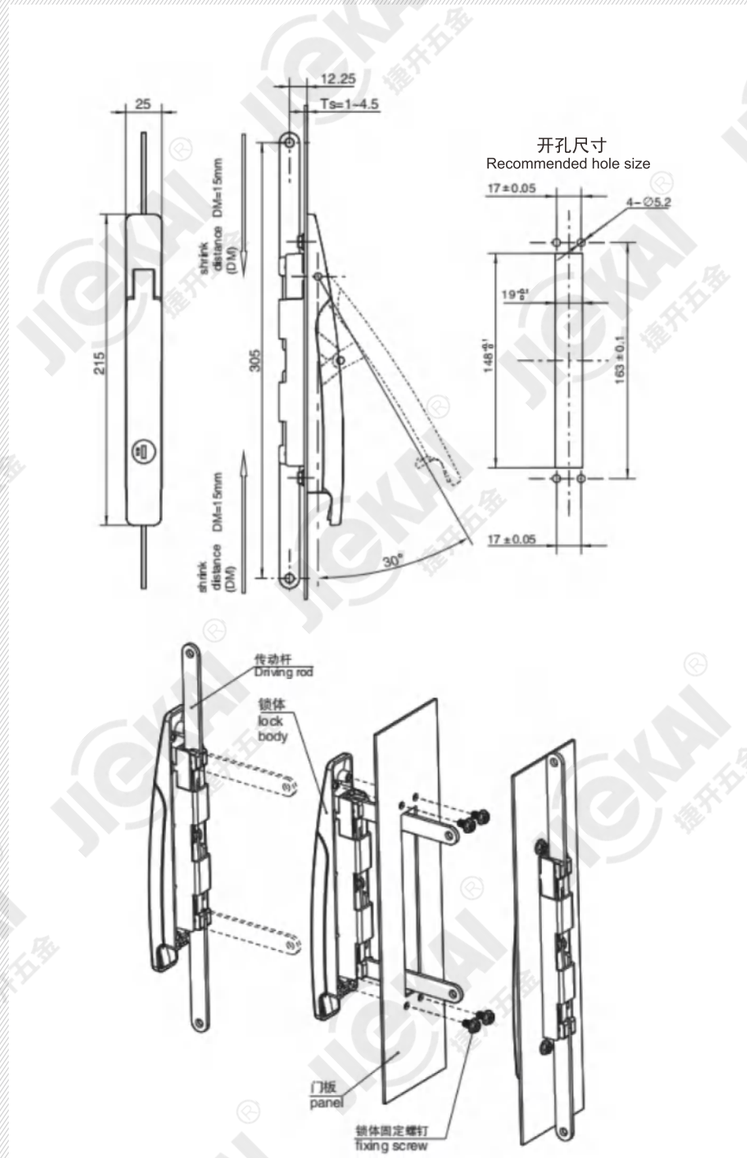

产品说明
Description

◆ 锌合金锁座、锁柄，喷砂镀亮铬齿条，喷无光黑
Zinc die-casting lock body、lock handle, sand bright chrome plating rack

产品型号 Product model
LG193-3N1N-P1