

DingYi

上海鼎羿流体技术有限公司





Centralized & Automated Lubrication System



Shanghai Dingyi Fluid Technology Co.,Ltd

Solution Provider & Quality Focus & Sustainability

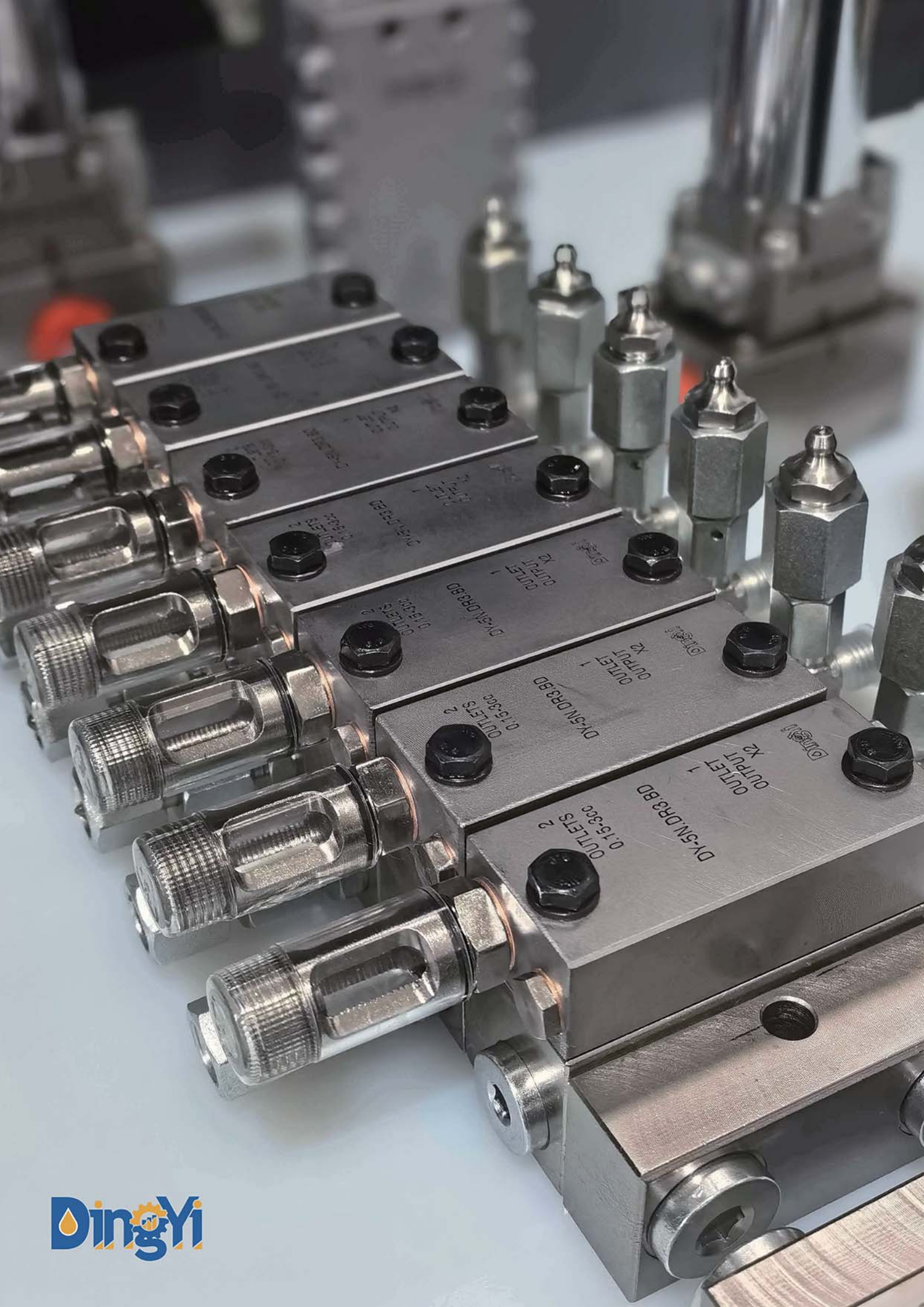
DY-5N.DR8.BD
OUTLET
1
OUTPUT X2
OUTLETS
2
0.15-300



Founded in 2010, Shanghai Dingyi Fluid Technology Co., Ltd. is an integrated enterprise specializing in the research and development, design, production, sales and technical services of lubrication equipment and mechanical equipment. We aim to introduce advanced international lubrication concepts, technologies and equipment into China and promote their application.

We provide customers with world-leading lubrication equipment solutions, address their needs for equipment lubrication and health management, and help enterprises achieve higher efficiency and better performance.









At present, the company's business is widely applied in numerous industries such as railway shield tunneling, mining, metallurgy, port operations and automated production. We adhere to the core values of focus, professionalism, dedication and accountability. Upholding the principles of customer first and mutual benefit and win-win cooperation, we go all out to provide sincere and thoughtful services to our customers!

Our Customers

XCMG KOMATSU SCHAEFFLER ZOOMLION CAT

LOVOL ZPMC 上海振华重工 中国铁建重工集团有限公司 CHINA RAILWAY CONSTRUCTION HEAVY INDUSTRY CO., LTD. 中铁隧道装备制造有限公司 CHINA RAILWAY TUNNELLING EQUIPMENT CO.,LTD.

The company has obtained the ISO 9001:2015 Quality Management System Certification and ISO 14001:2015 Environmental Management System Certification. We have a professional team of sales, technical support and after-sales service personnel, as well as our own dedicated installation team. Leveraging years of accumulated practical experience, we can offer customers a full suite of pre-sales and after-sales services, including technical consultation, system selection, design, on-site guidance, installation and training. Our rich experience underpins our high-level professional technologies and services. We remain committed to continuous exploration and innovation, and strive to deliver high-quality and cost-effective lubrication system solutions for our customers.






Solution Provider, Quality Focus, Sustainability

DINGYI FLUID TECHNOLOGY

Single line lubrication

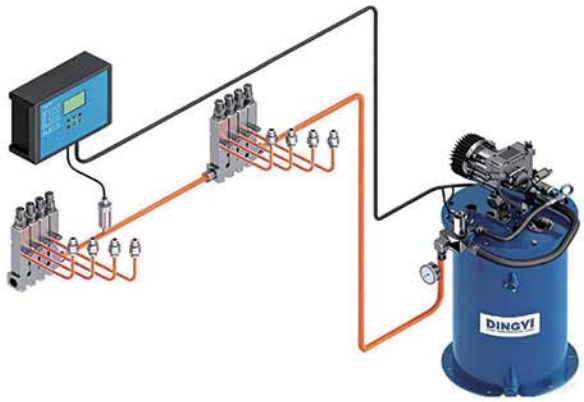

Progressive lubrication system

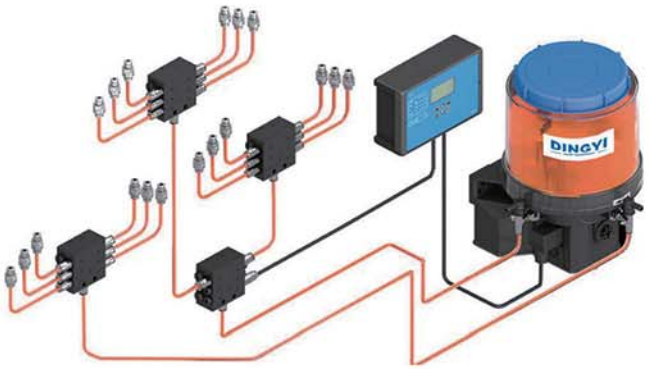

Multi line lubrication



Dual line lubrication system

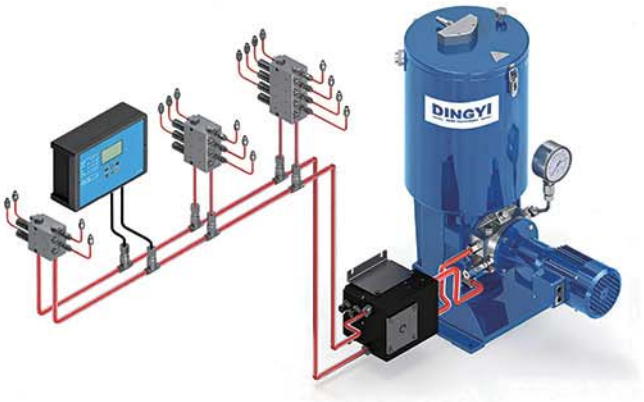

Contents

Industry fluid pump	
Pneumatic pump	1-4
Electric pump	5
Hydraulic pump	6
Electric pump	
Introduction	7
Model	
DY-P215	10
DY-P230	11
DY-P212	12
DY-P224	13
Pump element	14
DY-P204	15
DY-ZPU	18
DY-KSP	19
Metering device	
DY-MBB series	23
DY-SSV series	27
DY-SSVL series	31
Dual-line metering device	
DV series	33
DW series	35
Single line injector	
DY-1	36
Change over valve	
DY-DU1	37
Magnetic valve	
DY-MF	38
Spray system	
Introduction	39

Pneumatic pump

Pneumatic pumps comprise a pneumatic motor and a pump pipe. Pressure primers are compatible with standard 55-gallon drums.

Features:

- Modular structure ensures convenient maintenance
- Suitable for standard drum.
- Newly engineered pump tubes deliver various ratios and outputs to accommodate diverse applications.
- Ball style design for fluid materials
- Shovel foot style design for high viscosity non fluid materials

Applications:

- Integrated Lubrication Pump Station
- Pump Grease Filling
- Grease transfer
- Pumps for Various Viscous Media

65:1 **66:1** **68:1**



Pump models	DY-P681-200	DY-P651-110	DY-P661-60
Drive type	air	air	air
Air supply Pressure	40-101psi/ 3-7bar	40-101psi/ 3-7bar	40-101psi/ 3-7bar
Viscosity	up to 500k cps	up to 500k cps	up to 500k cps
Max. operation	6902 psi/ 476bar	6597psi/(455bar)	6699psi/(462bar)
Ratio	68:1	65:1	66:1
Output/cycle	200cc	110cc	60cc
Output/min	14L/min	7.7L/min	4.2L/min
Max. cycles/min	70	70	70
Drums capacity	55Ga	55Ga	55Ga
Level sensor	Low level	Low level	Low level
Outlet connection	M36x2	M36x2	M36x2
Inlet connection	G3/4" (F)	G3/4" (F)	G3/4" (F)

Code

Pump Models

Desc.	P/N	model	Qty.	Remark
Air pump	681-0000-000	DY-P681-200	1	Include air motor and pump tube
250mm air motor	681-1000-000	250mm	1	Include air motor
200cc pump tube	681-2000-000	200cc	1	Include pump tube
Mode DY-P651-110				
Desc.	P/N	model	Qty.	Remark
Air pump	651-0000-000	DY-P651-110	1	Include air motor and pump tube
200mm air motor	651-1000-000	200mm	1	Include air motor
110cc pump tube	651-3000-000	110cc	1	Include pump tube
DY-P661-60				
Desc.	P/N	model	Qty.	Remark
Air pump	661-0000-000	DY-P661-60	1	Include air motor and pump tube
140mm air motor	661-1000-000	140mm	1	Include air motor
60cc pump tube	661-3000-000	60cc	1	Include pump tube

Pump repair kits

DY-P68 1-200			
Desc.	P/N	Qty.	Remark
air pump repair kit	681-0000-100	1	include all items
250mm air motor kit	681-1000-100	1	include air motor items
200cc pump tube kit	681-2000-100	1	include pump tube items
DY-P651-110			
Desc.	P/N	Qty.	Remark
air pump repair kit	651-0000-100	1	include all items
200mm air motor kit	651-1000-100	1	include air motor items
110cc pump tube kit	651-3000-100	1	include pump tube items
DY-P661-60			
Desc.	P/N	Qty.	Remark
air pump repair kit	661-0000-100	1	include all items
140mm air motor kit	661-1000-100	1	include air motor items
60cc pump tube kit	661-3000-100	1	include pump tube items

Pneumatic pump

Pneumatic pumps consist of air motors and pump tubes. Pressure primers are available for various drum sizes, including the standard 16-gallon size and custom sizes.

Features:

- Modular structure ensures convenient maintenance
- Suitable for standard drum or custom size drums
- Newly engineered pump tubes deliver various ratios and outputs to accommodate diverse applications.
- Ball style design for fluid materials
- Shovel foot style design for high viscosity non fluid materials

Applications:

- Integrated Lubrication Pump Station
- Pump Grease Filling
- Grease transfer
- Pumps for Various Viscous Media

65:1



66:1



Technical data:

Model	DY-P651-Y110	DY-P661-YS60	DY-P661-YL60
Drive model	air	air	air
Air supply Pressure	40-101psi(3-7bar)	40-101psi(3-7bar)	40-101psi(3-7bar)
Viscosity	up to 500k cps	up to 500k cps	up to 500k cps
Max. pressure	6597psi(455bar)	6699psi(462bar)	6699psi(462bar)
Ratio	65:01:00	66:01:00	66:01:00
Output/cycle	110cc	60cc	60cc
Output/min	7.7L/min	4.2L/min	4.2L/min
Max. cycles/min	70	70	70
Drum capacity	16Gal(60L)	16Gal(60L)	50Gal(200L)
Level sensor	Low level	Low level	Low level
Outlet connection	M36x2	M36x2	M36x2
Inlet connection	G3/4"(F)	G3/4"(F)	G3/4"(F)

Code

Pump Models

Model:DY-P651-Y110				
Desc.	P/N	model	Qty.	Remark
Compact Air pump	651-0000-001	DY-P651-Y110	1	Include air motor and pump tube
200mm air motor	651-2000-000	200mm	1	Include air motor
110cc pump tube	651-4000-000	110cc	1	Include pump tube
Model:DY-P661-YS60				
Desc.	P/N	model	Qty.	Remark
Compact Air pump	661-0000-001	DY-P661-YS60	1	Include air motor and pump tube
140mm air motor	661-2000-000	140mm	1	Include air motor
60cc pump tube	661-4000-000	60cc	1	Include pump tube
Model:DY-P661-YL60				
Desc.	P/N	model	Qty.	Remark
Compact Air pump	661-0000-002	DY-P661-YL60	1	Include air motor and pump tube
140mm air motor	661-2000-000	140mm	1	Include air motor
60cc pump tube	661-5000-000	60cc	1	Include pump tube

Pump repair kits

Model:DY-P651-Y110			
Desc.	P/N	Qty.	Remark
Compact air pump repair kit	651-0000-101	1	include all items
200mm air motor kit	651-2000-100	1	include air motor items
110cc pump tube kit	651-4000-100	1	include pump tube items
Model:DY-P661-YS60			
Desc.	P/N	Qty.	Remark
Compact air pump repair kit	661-0000-101	1	include all items
140mm air motor kit	661-2000-100	1	include air motor items
60cc pump tube kit	661-4000-100	1	include pump tube items
Model:DY-P661-YL60			
Desc.	P/N	Qty.	Remark
Compact air pump repair kit	661-0000-102	1	include all items
140mm air motor kit	661-2000-100	1	include air motor items
60cc pump tube kit	661-5000-100	1	include pump tube items

Electric pump

Electric pump consist of electric motor and pump element, motor is 3- phase motor. The motor is also available in variable frequency version. The drum can be customized to different types based on specific applications.

Features:

- Modular structure ensures convenient maintenance
- Suitable for standard drum or custom size drums

Applications:

- Integrated Lubrication Pump Station
- Pump Grease Filling
- Grease transfer
- Pumps for Various Viscous Media

0.37kWx2

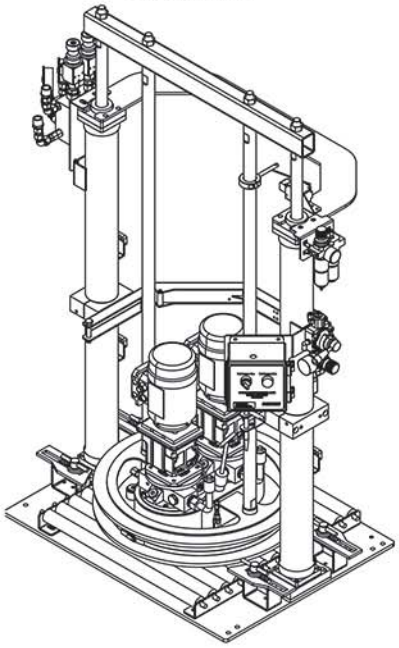

0.55kW

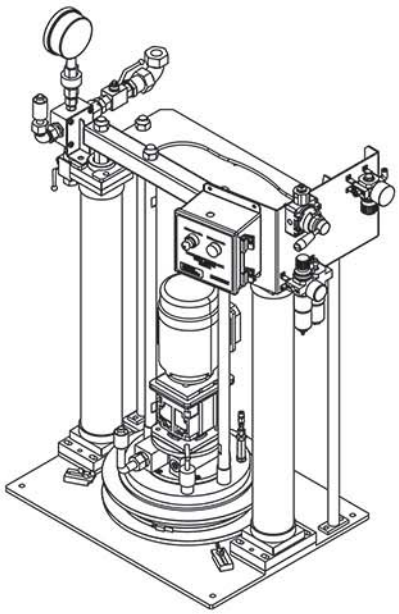

Technical data:

Item		Data(two pumpx2)
pump element+Motor		ZPU08
Pump element	output (cc/stroke)	2.2
	output (l/h)	8
	speed (rpm)	59
	Max. pressure (bar)	400
	drum (L)	200
	filter	filtration:280μm，filter area:5.1cm^2
	viscisity	up to NLGI3
	safety valve	350MPa
	noise	<70 dB(A)
	rotation direction	option
	temperature	-20°C to +80°C
motor (variable frequency)	model	MS7124
	working voltage	380-420VAC/50Hz 440-480VAC/60Hz
	Power (kW)	0.37
	torque (Nm)	57
	range (Hz)	0~120
	speed	1400
	ratio	23.6:1
	IP rating	55
sensor		low level
outlet connection		M36x2
intlet connection		G1/4" (F)

Item		Data
pump element+Motor		ZPU14
Pump element	output (cc/stroke)	2.2
	output (l/h)	14
	speed (rpm)	101
	Max. pressure (bar)	400
	drum(L)	60
	filter	filtration:280μm，filter area:5.1cm2
	viscisity	up to NLGI3
	safety valve	
	noise	<70 dB(A)
	rotation direction	option
	temperature	-20°C to +80°C
motor (variable frequency)	model	
	working voltage	380-420VAC/50Hz 440-480VAC/60Hz
	Power (kW)	0.55
	torque (Nm)	49.7
	range (Hz)	0~120
	speed	1400
	ratio	13.8:1
	IP rating	55
sensor		low level
outlet connection		M36x2
intlet connection		G1/4" (F)

www.dingyi-fluid.com
E-mail:sales@dingyifluid.com

Hydraulic pump

Hydraulic pumps consist of a hydraulic motor and a pump cylinder.
Pressure primers are available for various drum sizes, including 16-gallon and 55-gallon; custom sizes are also available. MA / A certification options are provided.

Features:

- Modular structure ensures convenient maintenance
- Suitable for standard drum or custom size drums

Applications:

- Integrated Lubrication Pump Station
- Pump Grease Filling
- Grease transfer
- Pumps for Various Viscous Media

247540(10:1)

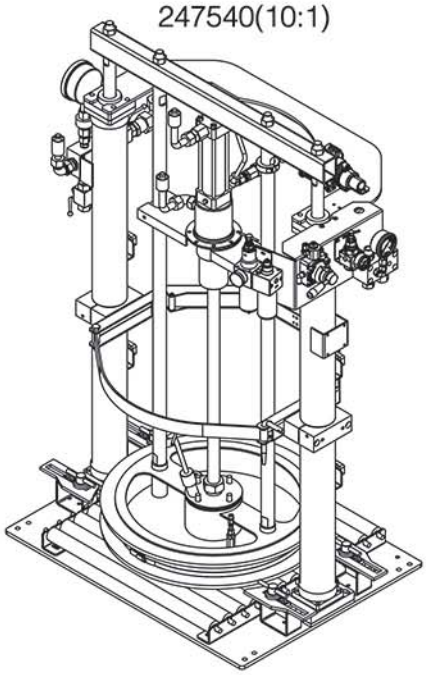

OMR200+DY-ZPU

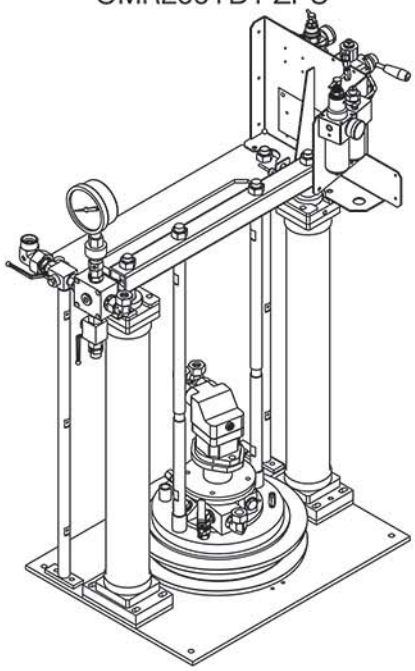

Technical data:

Des.		data
model		247540(10:1)
max. pressure		350bar
output		0.5kg/min
output/cycle		9.8cc/cycle
viscosity		up to NLGI2
hydraulic motor	max. pressure	28bar
	max.output	11.7L/m
	output/cycle	0.195L/cycle
	stoke	76.2
	piston area	9.55cm
	piston area	34.9mm
	Max. temperature	121℃
Drum		180KG
output connection		M36x2
working temperature		-34℃ to 93℃

name	Des.	data
pump	model	ZPU
	lubricants	up to NLGI2
	max. pressure	400bar
	output	2.2CC/r
hydraulic motor	motor model	OMR200
	output	200ml/r
	max.pressure drop	175bar
	speed range	10~300r/min
	max.flow	60L/min
	max torque	450Nm
hydraulic motor	pressure adjust range	35-140bar
	flow adjust a	0-80L/min
	inlet connection	G1/2(F)
Drum		60KG
sensor		low level
outlet connection		M36x2
inlet connection		G1/4" (F)

General

Multi-line pumps serve as central lubrication pumps for supplying large-scale progressive lubrication systems. Maximum pressure: up to 40 MPa. Each pump element / outlet can operate an independent progressive lubrication system. A variety of reservoir options are available, equipped with high-level, low-level, high-high-level, and low-low-level sensors.

Features:

- Suitable for lubrication of large scale mechanical equipment
- Output of K7, KR7 and KR12 pump elements is adjustable
- Lubrication systems are expandable
- Reservoirs are available in 10L and 30L capacities
- Level sensors include low, low low, high and high high options

General view

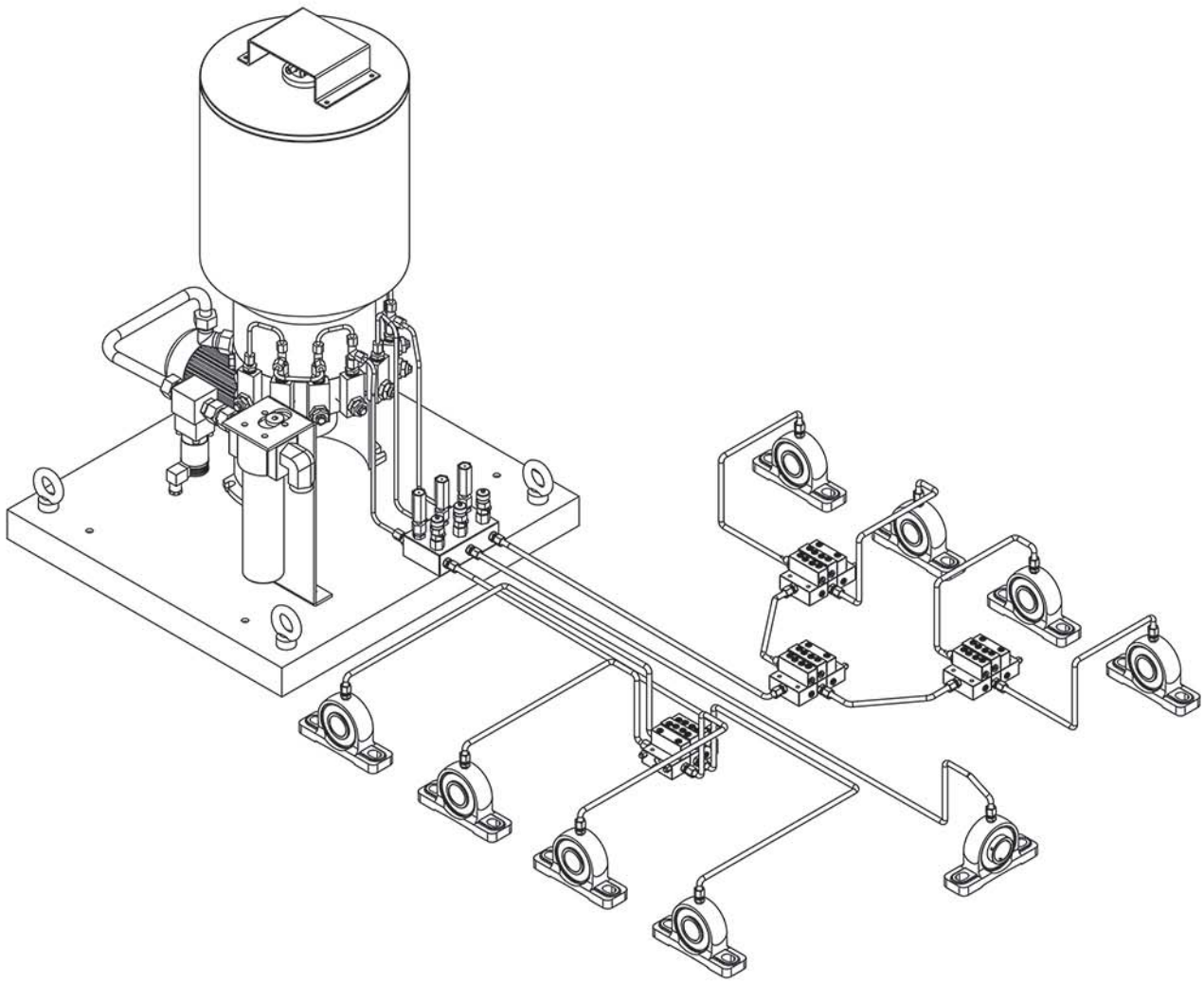

www.dingyi-fluid.com
E-mail:sales@dingyifluid.com

Working principle

Multi-line pumps are available with a three-phase multi-voltage motor (380–420 V / 50 Hz or 440–480 V / 60 Hz), a single-range 500 V / 50 Hz motor, a free shaft end for connection to other motors, or an oscillating drive.
Various gear ratios and reservoir sizes are available, with or without level monitoring.
Reservoirs are offered in 10 L and 30 L capacities.
The pump is suitable for both grease and oil lubricants.
As a high-pressure multi-line centralized lubrication pump, it can accommodate up to 30 adjustable pump elements (DY-P230) and is designed for use in automatic progressive lubrication systems.
It can be used for direct feeding of lubrication points or as a central lubrication source for large-scale progressive systems.

	DY-P215-M100	DY-P230-M100	DY-P212-MG060	DY-P224-MG060
Number of Pump element	1-15	1-30	1-12	1-24
Lubricants	up to NLGI-3##			
Reservoir size	Standard is 10/30L（Special Size can be made）			
Pump element	K7,0-180ml/h@50HZ	K7,0-180ml/h@50HZ	KR7,0-750ml/h@50HZ	
			KR12,500-1500ml/h@50HZ	
motor	0.37kw,1360r/min	0.37kw,1360r/min	0.75kw,1380r/min	1.1kw,1390r/min
Ration	100:1	100:1	60:1	60:1
Voltage	380-420V/50HZ;440-480V/60HZ			
IP grade	IP55（Special can be made）			

K series pump elements are used in DY-P Multi-line pumps. It combined with piston, check valves. The maximum operating pressure is up to 400 bar (40 MPa).
Three models are available according to different output rates: K7, KR7 and KR12.

Model	output	pump model			
		DY-P215	DY-P230	DY-P212	DY-P224
K7	0~180ml/h@50HZ	●	●		
KR7	0~750ml/h@50HZ			●	●
KR12	500~1500ml/h@50HZ			●	●

Identification chart

The complete pump unit is specified by the type code on the nameplate.

Example: DY-P215 MG100 - 030XYHL 5K7 - 380-420,440-480

• Base type:

DY: DingYi fluid
P215 : 215 housing assembly
P230 : 230 housing assembly
P212 : 212 housing assembly
P224 : 224 housing assembly

• Drive assembly:

Motor
MG : three-phase flanged motor
(the motor designation with extension e. g. for voltages, frequencies, explosionproof design is added to the type code))
F : free shaft end
Gear box
100 : gear ratio i 100
60 : gear ratio i 60
((If other gear ratio needed ,make specific note))

• Reservoir Assembly:

010 : 10 L mental reservoir
030 : 30 L mental reservoir
XY : reservoir for grease and oil
N : reservoir without level control
HL : reservoir with one low and one high level control
HHLL : reservoir with two low and two high levels control
(HHLL two photoelectric sensors needed，a sensor is equipped with 2 switching points. If only one low-level control is desired, the corresponding contacts must be connected. A 24 VDC supply voltage is required for the senor.))

• Pump Element:

1 to15:215 number of the pump elements
1 to12:212 number of the pump elements
K7 :pump element adjustable,piston diameter 7mm
KR7/KR12 :pump element adjustable,piston diameter 12mm

• Extensions for the Motor Designation:

380-420，440-480: standard multi-range motor for 380 420 V/50Hz and 440 480 V/60Hz
000: Pump without motor, but equipped with connecting flange

DY-P215



Introduction:

The DY-P215 centralized lubrication pump is a high pressure multi line pump capable of accommodating up to 15 adjustable pump elements. It is designed for use in automatic progressive lubrication systems, enabling direct feeding of lubrication points or serving as a central lubrication pump for large scale progressive systems.

DY-P215 pumps can be configured with a three phase multi voltage motor (380-420 V / 50 Hz or 440-480 V / 60 Hz), a single speed 500 V / 50 Hz motor, a free shaft end for connection to hydraulic motors, or an oscillating drive.

Various gear ratios and reservoir sizes are available, with or without level monitoring. Reservoirs are offered in 10 L and 30 L capacities.

The pump is suitable for use with both grease and oil.

Features:

- Positively actuated, adjustable pump elements for industrial applications and continuous operation
- Reservoir sizes of 10, or 30 L
- Fill level control/fill level switch with 1 to 4 switching points
- Free shaft, variable for kinds of drivers

Applications:

- Automotive industry
- Tunnel boring machinery, mining
- Construction materials machinery
- Metal-forming machinery

Technical data:

Item		data	remark
number of outlet		1 - 15	
outlet thread		G1/4"	
refilling connector		M22x1.5	
Max. pressure		400bar	
Lubricants		up to NLGI-3#	
		above 20mm /s mineral oil	
output	K7	0-180ml/h@50Hz	60Hz motor, output increase20%.
Reservoir		10 /30 L	
Driven		electric motor	
		Hydraulic motor	
		worm shaft	
Ratio		100	
speed	MG100	1340r/min（50Hz）	
weight		14.5kg	excluding lubricants
pump element weight		0.58kg	
noise		≤70dB（A）	
Sensor		High, low, high high, low low level are option	

Motor data:

Des.	Mark	unit	DY-P215-MG100
motor Manufacturer			DY
Motor model			3-phase,flange connect
frequency	f	Hz	50
Power	P	KW	0.37
speed	n	min-1	1340
Torque	M	N m	2.6
current	IN	380-420 V/50Hz, A	1.1
		440-480 V/60Hz, A	1.05
power factor	cosø		0.76
efficiency	η	%	49
connect type			B14（Flange）
protection grade	IP		55（Special need to remark）
Insulation level			F
weight		KG	9
Flange		mm	Ø70
Shaft end		mm	ø14X30

DY-P230



Introduction:

The DY-P230 centralized lubrication pump is a high pressure multi line pump capable of accommodating up to 30 adjustable pump elements.
It is designed for automatic progressive lubrication systems, enabling direct feeding of lubrication points or serving as a central lubrication unit for large scale progressive systems.
DY-P230 pumps can be configured with a three phase multi voltage motor (380-420 V / 50 Hz or 440-480 V / 60 Hz), a single speed 500 V / 50 Hz motor, a free shaft end for connection to hydraulic motors, or an oscillating drive.
Various gear ratios and reservoir sizes are available, with or without level monitoring.
Reservoirs are offered in 10 L and 30 L capacities.
The pump is compatible with both grease and oil.

Features:

- Positively actuated, adjustable pump elements for industrial use and continuous operation
- Reservoir capacities: 10 L or 30 L
- Fill level control / level switches with 1 to 4 switching points
- Free shaft end, compatible with various drive types

Applications:

- Automotive industry
- Tunnel boring machinery, mining
- Construction materials machinery
- Metal-forming machinery

Technical data:

Item		data	remark
number of outlet		1--30	
outlet thread		G1/4"	
refilling connector		M22x1.5	
Max. pressure		400bar	
Lubricants		up to NLGI-3##	
		above 20mm /s mineral oil	
output	K7	0-180ml/h@50Hz	60Hz motor, output increase20%.
Reservoir		10 /30 L	
Driven		electric motor	
		Hydraulic motor	
		worm shaft	
Ratio		100	
speed	MG100	1340r/min（50Hz）	
weight		16.5kg	excluding lubricants
pump element weight		0.58kg	
noise		≤70dB（A）	
Sensor		High, low, high high, low low level are option	

Motor data:

Des.	Mark	unit	DY-P215-MG100...
motor Manufacturer			DY
Motor model			3-phase,flange connect
frequency	f	Hz	50
Power	P	KW	0.37
speed	n	min-1	1340
Torque	M	N·m	2.6
current	IN	380-420V/50Hz, A	1.1
		440-480V/60Hz, A	1.05
power factor	cosø		0.76
efficiency	η	%	49
connect type			B14（Flange）
protection grade	IP		55（Special need to remark）
Insulation level			F
weight		KG	9
Flange		mm	Ø70
Shaft end		mm	ø14x30

www.dingyi-fluid.com
E-mail:sales@dingyifluid.com

DY-P212



Introduction:

The DY-P212 centralized lubrication pump is a high pressure multi line pump capable of accommodating up to 12 adjustable pump elements.
It is designed for automatic progressive lubrication systems, enabling direct feeding of lubrication points or serving as a central lubrication unit for large scale progressive systems.
DY-P212 pumps can be configured with a three phase multi voltage motor (380-420 V / 50 Hz or 440-480 V / 60 Hz), a single speed 500 V / 50 Hz motor, a free shaft end for connection to hydraulic motors, or an oscillating drive.
Various gear ratios and reservoir sizes are available, with or without level monitoring.
Reservoirs are offered in 10 L and 30 L capacities.
The pump is compatible with both grease and oil.

Features:

- Positively actuated, adjustable pump elements for industrial applications and continuous operation
- Reservoir capacities: 10 L or 30 L
- Fill level control / level switches with 1 to 4 switching points
- Free shaft end, compatible with various drive types

Applications:

- Automotive industry
- Tunnel boring machinery, mining
- Construction materials machinery
- Metal-forming machinery

Technical data:

Item		data	remark
number of outlet		1--12	
outlet thread		G3/8"	
refilling connector		M27x1.5	
Max. pressure		400bar	
Lubricants		up to NLGI-3#	
		above 20mm /s mineral oil	
output	KR7	0-750ml/h@50Hz	60Hz motor, output increase20%.
	KR12	500-1500ml/h@50Hz	
Reservoir		10 /30 L	
Driven		electric motor	
		Hydraulic motor	
		worm shaft	
Ratio		60	
speed	MG60	1380r/min（50Hz）	
weight		33kg	excluding lubricants
pump element weight		1.1kg	
noise		≤70dB（A）	
Sensor		High, low, high high, low low level are option	

Motor data:

Des.	Mark	unit	DY-P212-MG060
motor Manufacturer			DY
Motor model			3-phase,flange connect
frequency	f	Hz	50
Power	P	KW	0.75
speed	n	min-1	1380
Torque	M	N m	5.2
current	IN	380-420V/50Hz, A	2.03
		440-480V/60Hz, A	1.95
power factor	cosøø		0.76
efficiency	η	%	62%
connect type			B14（flange）
protection grade	IP		55（Special need to remark）
Insulation level			F
weight		KG	9.3
Flange		mm	Ø80
Shaft end		mm	ø19X40

DY-P224



Introduction:

The DY-P224 centralized lubrication pump is a high pressure multi line pump capable of accommodating up to 24 adjustable pump elements.
It is designed for automatic progressive lubrication systems, enabling direct feeding of lubrication points or serving as a central lubrication unit for large scale progressive systems.
DY-P224 pumps can be configured with a three phase multi voltage motor (380-420 V / 50 Hz or 440-480 V / 60 Hz), a single speed 500 V / 50 Hz motor, a free shaft end for connection to hydraulic motors, or an oscillating drive.
Various gear ratios and reservoir sizes are available, with or without level monitoring.
Reservoirs are offered in 10 L and 30 L capacities.
The pump is compatible with both grease and oil.

Features:

- Positively actuated, adjustable pump elements for industrial applications and continuous operation
- Reservoir capacities: 10 L or 30 L
- Level control / level switches with 1 to 4 switching points
- Free shaft end, compatible with various drive types

Applications:

- Automotive industry
- Tunnel boring machinery, mining
- Construction materials machinery
- Metal-forming machinery

Technical data:

Item		data	remark
number of outlet		1--24	
outlet thread		G3/8"	
refilling connector		M27x1.5	
Max. pressure		400bar	
Lubricants		up to NLGI-3#	
		above 20mm /s mineral oil	
output	KR7	0-750ml/h@50Hz	60Hz motor, output increase20%.
	KR12	500-1500ml/h@50Hz	
Reservoir		10 /30 L	
Driven		electric motor	
		Hydraulic motor	
		worm shaft	
Ratio		60	
speed	MG60	1390r/min（50Hz）	
weight		52kg	excluding lubricants
pump element weight		1.1kg	
noise		≤70dB（A）	
Sensor		High, low, high high, low low level are option	

Motor data:

Des.	Mark	unit	DY-P224-MG060
motor Manufacturer			DY
Motor model			3-phase,flange connect
frequency	f	Hz	50
Power	P	KW	1.1
speed	n	min-1	1390
Torque	M	N m	7.6
current	IN	380-420V/50Hz, A	3
		440-480V/60Hz, A	2.86
power factor	cosø		0.73
efficiency	η	%	63%
connect type			B14（flange）
protection grade	IP		65
Insulation level			F
weight		KG	11
Flange		mm	Ø80
Shaft end		mm	ø19X40

www.dingyi-fluid.com
E-mail:sales@dingyifluid.com

Pump element

Introduction:

K7, KR7 and KR12 pump elements are all suitable for use in DY-P215/230 pumps.



Features:

- K7、KR7 and KR12 are adjustable
- Integrated check valve within the pump element
- Surface treatment :galvanized

Technical data:

Model	K7	KR7	KR12
output	0-180ml /h	0-750ml /h	500-1500ml /h
Max. pressure	40MPa		
Lubricants	up to NLGI2		
outlet thread	G1/4"	G3/8"	
weight	0.58kg	1.1kg	
working temperature	-20°c ~ +70°c		
Diameter	7mm	12mm	
lenghth of adjustment (R))	16"22mm	18"25mm	
Default the output of 50Hz.			

Pump element correct mounting:

- Mounting screw size (M):
  DY P215/230 — M22 1.5
  DY P212/224 — M27 1.5
- Pump element with HDPE seal plate

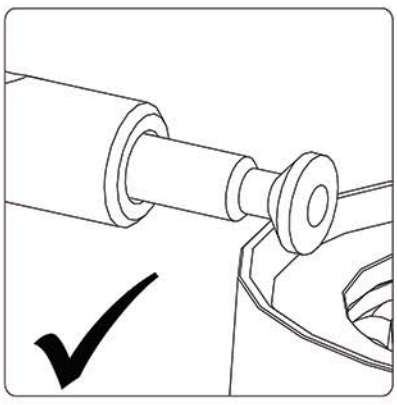

Right

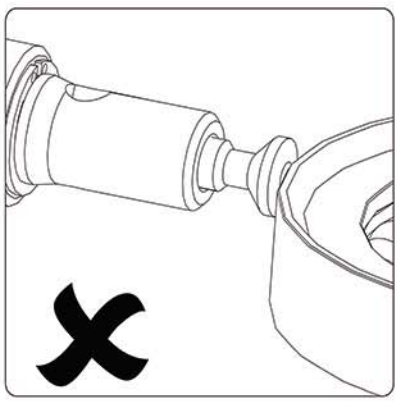

Wrong

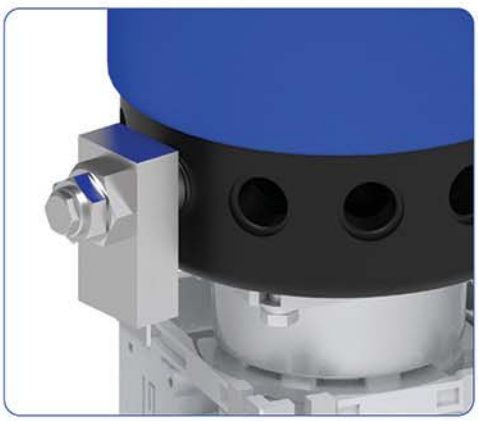

DY-P204

9L



Introduction:

The DY-P204 centralized lubrication pump is a powerful, robust, compact multi line pump capable of accommodating up to 4 pump elements.
It is designed for use in automatic progressive lubrication systems, making it ideal for mobile applications, small to medium sized machinery, and general industrial use.
Versatile, compact and economical, these pumps can be equipped with low level monitoring and a printed circuit board.
Pumps are available with 1, 2, 3 or 4 adjustable output elements.
Reservoir capacities: 3 L, 6 L or 9 L.
Refer to the pump selection guide for complete configuration details.

Features:

- 3L、6L、9L resservior option
- Oir or grease lubricant option with different level sensor
- With or without controller box（MCB-204）

Applications:

- Automotive industry
- Agriculture machinery and crane machine
- Construction materials machinery

Technical data :

Max. pressure:	350bar
Rated voltage:	24VDC
number of pump element:	4
output (R7) :	1.4~5.0 cc/min
rated speed:	19 r/min
power:	72W
current:	3A (24VDC))
lubricants:	Up to NLGI2#
driven:	24VDC
Refilling:	Top or bottom
working time:	adjust accordingly
Reservior:	3L、6L、9L option
Sensor:	low level, high level option
protection grade:	IP69
working temperature:	-20°c ~ +70°c
outlet connection:	G1/4" ((F))

Resverviors:

3L **9L**



www.dingyi-fluid.com
E-mail:sales@dingyifluid.com

Identification chart

The complete pump unit is specified by a type code on the nameplate.

Example:

DY-P204	3	X	N-	2	B7	-	24	-	1A	-	V00
DY-P204	6	X	L-	4	B7	-	24	-	2A	-	V00

• Base type:

DY : DingYi fluid
P204 : 204 housing assembly

• Reservoir Assembly:

3 : 3L transparent plastic reservoir
6 : 6L transparent plastic reservoir
9 : 9L transparent plastic reservoir
Lubricants:
X : Grease，up to NLGI2#
Y : oil，50-1500cSt
Level sensor:
N : reservoir without level control
L : reservoir with low level control
HL : reservoir with low and high level control

• Pump Element:

1-4 : 204 number of the pump elements
Pump Element model:
K7 : Fixed displacement，pump element diameter:7mm
R7 : Adjustable displacement，pump element diameter:7mm

• Drive assembly:

24 : 24VDC motor and gear box

• Number of connections:

1A : 1 connection，24VDC power supply
2A : 2 connections，24VDC power supply+low level
3A : 3 connections，24VDC power supply+low level+high level

• Controller box:

blank : without controller box
V00 :with controller box,seperated to pump housing
V01 :with controller box,integrated to pump housing

Pump element







Introduction:

DY-P204 has two kinds pump: B7,R7

- B7 fixed pump element
- R7 adjustable pump element

Technical data:

Model	B7	R7
output	5.0cc/Min	1.4-5cc/Min
Max. pressure	35MPa	
Lubriants	up to NLGI2#	
outlet thread	G1/4"	
weight	0.28kg	0.3kg
temperture	-20°C to 70°C	
element daimeter	7mm	
Thread	M22x1.5	

Features:

- B7 fixed and R7 adjustable output options
- Check valve integrated in pump element
- Surface treatment :galvanized

Dimension:

B7

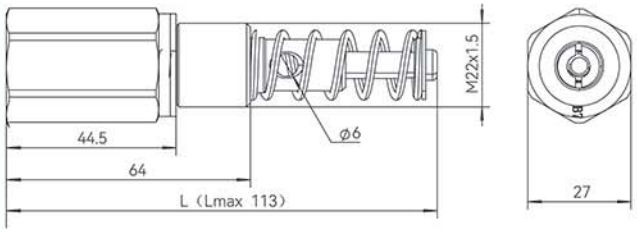

R7

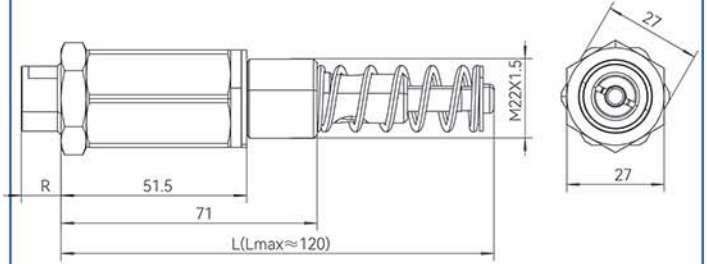

www.dingyi-fluid.com
E-mail:sales@dingyifluid.com

DY-ZPU



Introduction:

DY-ZPU 08/14/24 pumps are primarily designed for dual-line lubrication systems or for use as supply pumps, with a maximum operating pressure of 400 bar (5800 psi).

Depending on the system layout, these electric-driven pumps can deliver lubricant over distances of up to 120 meters (131 yd) and beyond.

Available with 40 L or 100 L (reservoirs 10 or 26 gal), DY-ZPU 08/14/24 pumps come standard equipped with a pressure relief valve, check valve, lubricant filter, and pressure gauge.

Thanks to the integrated stirring device, these rugged pumps operate reliably within a temperature range of -20 °C to +80 °C (-4 °F to 176 °F).

Technical data:

Function principle .....electrically operated piston pump

Drive speed.....depending on model 60-180 r/min

Operating temperature ....-20 to +80℃,(-4 to +176℉)

Lubricant.....grease: up to NLGI 3

Oil: with a viscosity of min 20 mm2/s

Metering quantity 1).....DY-ZPU08: 8 000 cm/h

DY-ZPU14: 14000cm /h(855in /h)

DY-ZPU24: 24000cm /h(1465in /h)

Operating pressure.....max. 400 bar,5 800 psi

Reservoir capacity.....40 or 100L,10 or 26 gal

Main line connection .....G3/4 female

Voltage 380-415VAC/50Hz,

420 480VAC/60Hz,500VAC/50Hz

Protection class.....IP 65

Dimensions.....depending on the model

min.760x670x410mm

max.975x825x500mm

min.30x26x16in

max.38.5x32.5x20in

Mounting position.....vertical

Features:

- Reliable
- Easy to service
- Three options for high lubricant output
- Ultrasonic low- and high-level control options
- Built-in lubricant filter

Applications:

- Cement plants
- Steel mills
- Power plants
- Mining
- Large machines

DY-KSP

DY—KSP grease pump is designed to be inserted into a standard grease bucket, pumping grease directly from the bucket. It is suitable for standard grease buckets of 20L (18kg), 55L (50kg) and 200L (180kg) respectively. The pump mechanism operates while immersed in the grease bucket. A mixing paddle is installed at the lower end of the mechanism to assist with air evacuation and grease suction, eliminating the need for a pressure plate. It is extremely easy to use and facilitates the complete removal of grease from the bucket, avoiding waste. The rocker arm structure incorporates a square guide rail supported by upper and lower bearings and driven manually. A support rod is fitted inside the square guide rail to balance the weight of the grease pump and the bucket cover, allowing effortless manual operation.

55L,380VAC

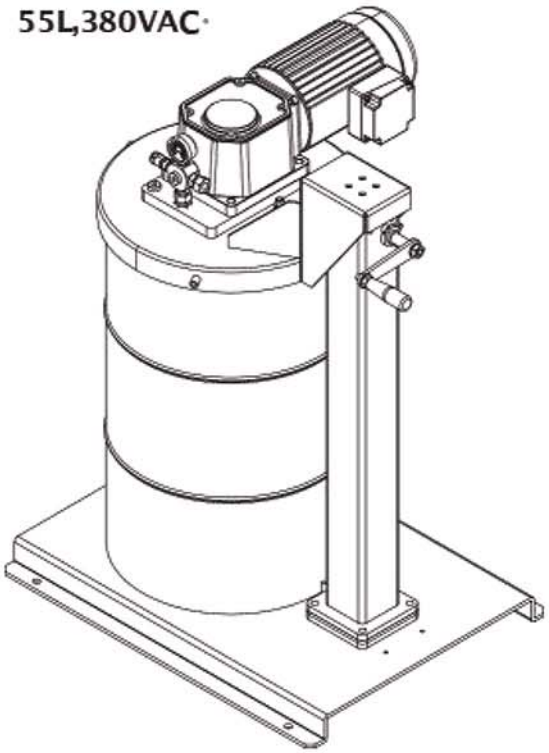

55L,hydraulic motor

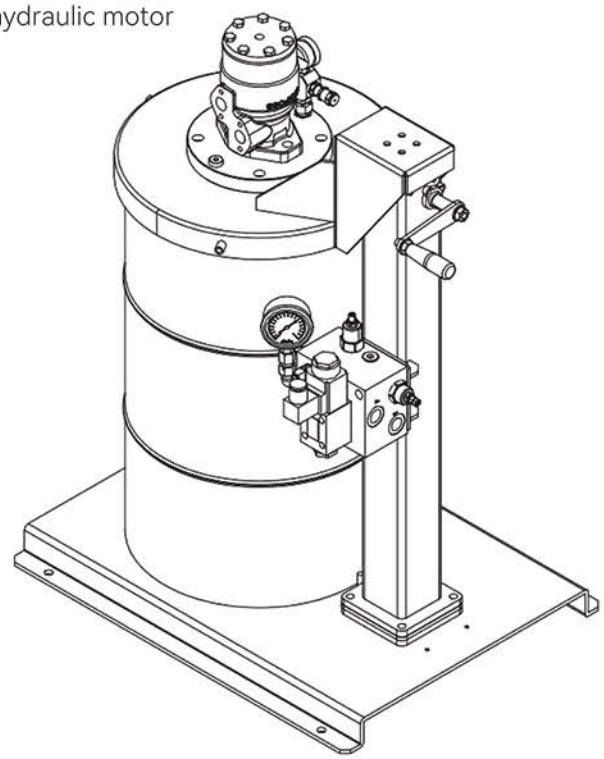

DY-KSP is a high-pressure pump with a maximum outlet pressure of 35 MPa. It supplies oil to multiple lubrication points simultaneously through long-distance pipelines. It is compatible with high-viscosity grease up to NLGI #2.

Features

– Grease directly from standard grease buckets, suitable for 20L, 55L and 200L standard grease buckets;

– DY-KSP series grease pumps are available in two displacements: DY-KSP10 and DY-KSP15. Each model can be equipped with two plunger units, and 1 or 2 plunger units can be installed as required;

– Various driving modes are available: electric, hydraulic or pneumatic. For electric drive, 380VAC or 24VDC can be selected;

– Support rod balances the weight of the grease pump, allowing easy manual operation for grease bucket replacement;

– Low-level switch and pressure switch can be configured as required.

The selection table is for the pump unit, which consists of the pump element and the drive part.

For example:

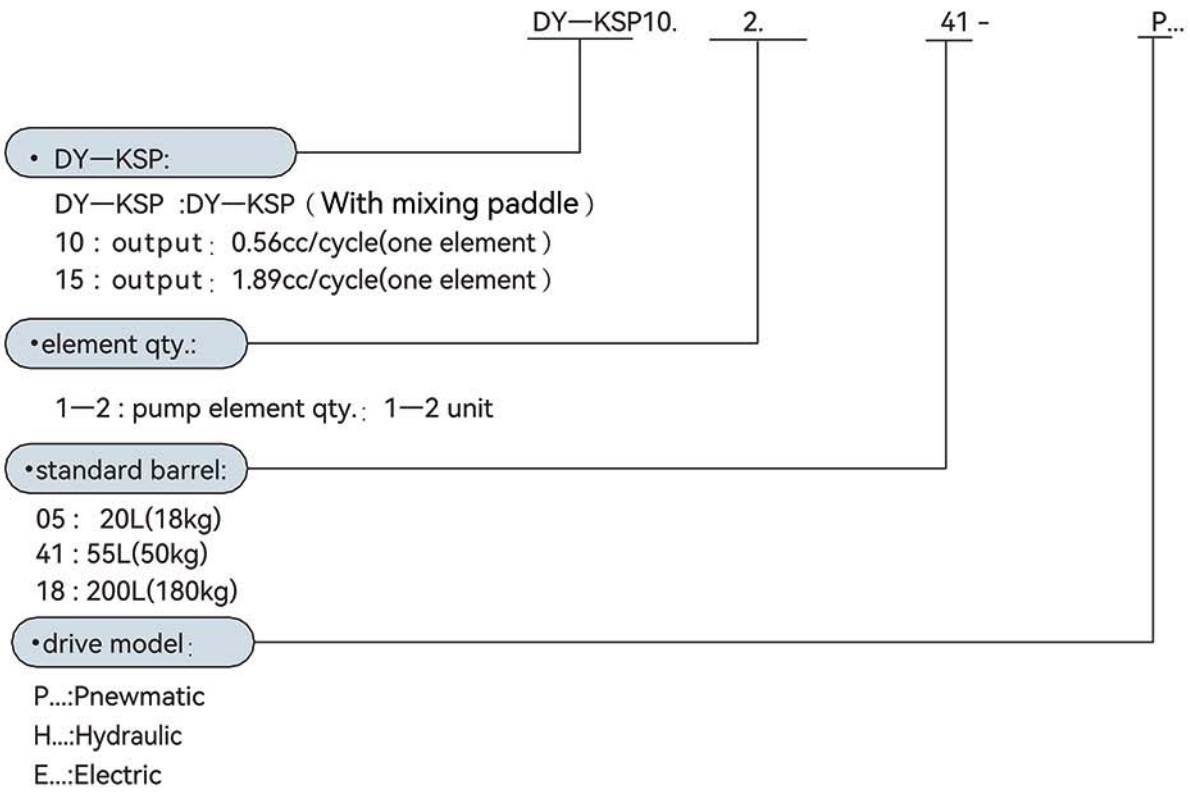

Model：

pump	Model	output	Barrel size
DY-KSP	DY-KSP10.2.41	1.12cc/cycle	55L
	DY-KSP10.2.05	1.12cc/cycle	20L
	DY-KSP10.1.41	0.56cc/cycle	55L
	DY-KSP10.1.05	0.56cc/cycle	20L
	DY-KSP15.2.18	3.78cc/cycle	200L
	DY-KSP15.2.41	3.78cc/cycle	55L
	DY-KSP15.1.18	1.89cc/cycle	200L
	DY-KSP15.1.41	1.89cc/cycle	55L

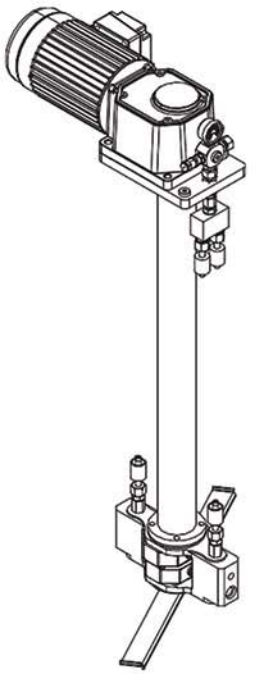

Electric

model	DY-KSP10.X.XX.XX	DY-KSP15.X.XX.XX	DY-KSP15.X.XX.XX
Electric motor	0.22kW, 15:1	0.75kW,30:1	1.1kW,15:1
voltage	380VAC,5Hz		
Max. pressure	350bar		
output/cycle	0.56cc/cycle	1.89cc/cycle	
output/min(one element)	52cc/min	90cc/min	180cc/min
output/min(two element)	105cc/min	180cc/min	360cc/min
RPM	94rpm	47rpm	94rpm
Torque	22N.m	150N.m	110N.m
Viscosity	Up to NLGI2		
Barrel size	20L or 55L	55L or 200L	
IP	IP54		
Temperature	-40℃ to 65℃		
Outlet connection	G1/4(F)		

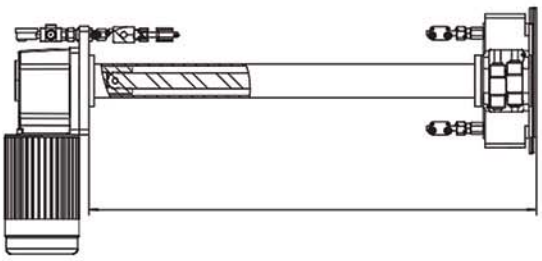

pump

Barrel size	H(mm)	
200L	855	870
55L	600	620
20L	350	370

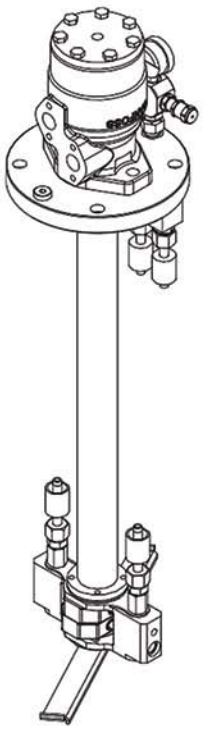

Pump model		DY-KSP10.X.XX.XX	DY-KSP15.X.XX.XX
Hydraulic motor	Motor	BMR50	BMR200
	output	51.7ml/r	200ml/r
	Max. pressure	5MPa	5MPa
	Max. Torque	34N•m	129N•m
	Max. output	16L/min	60L/min
	RPM Range	Below 300r/min	24~304r/min
pump	viscosity	Up to NLGI2	
	Max. pressure	350bar	
	Output(2 element)	1.12cc/cycle	3.78cc/cycle
Drum		55L	200L
Outlet connection		G3/8(F)	G3/8(F)

www.dingyi-fluid.com
E-mail:sales@dingyifluid.com

20L,DY—KSP10,0.2kW

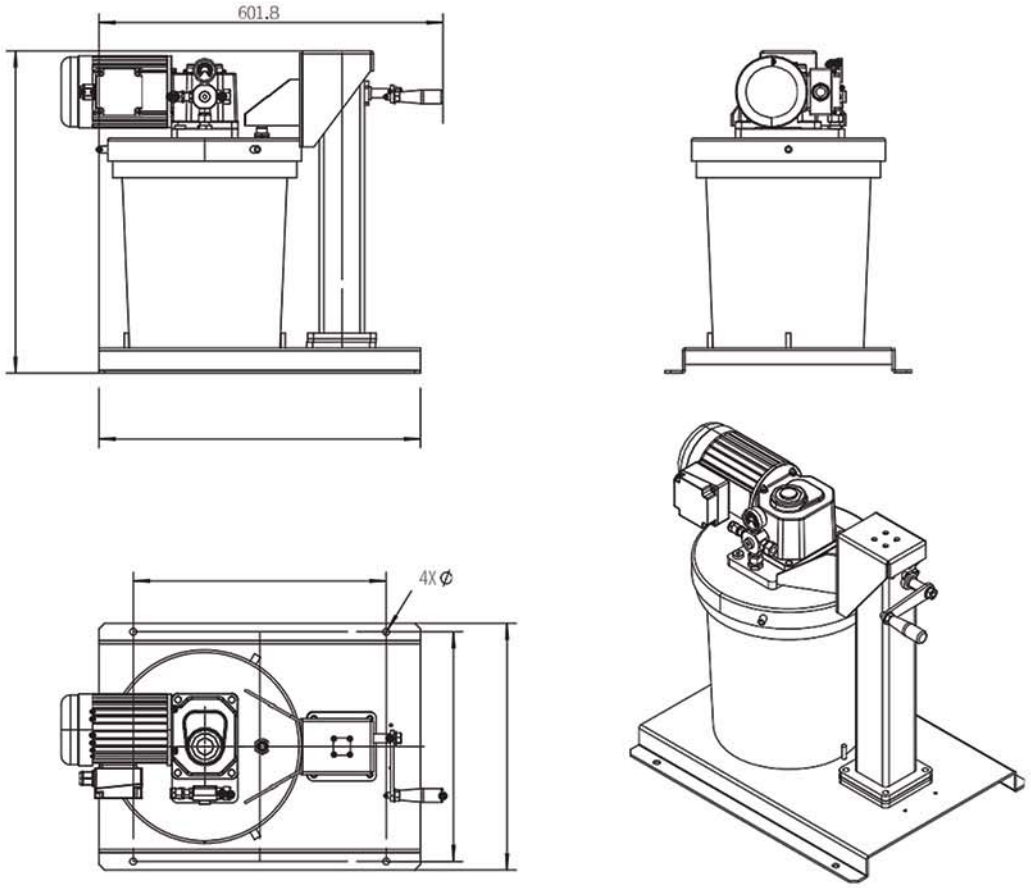

55L,DY—KSP10,OMR

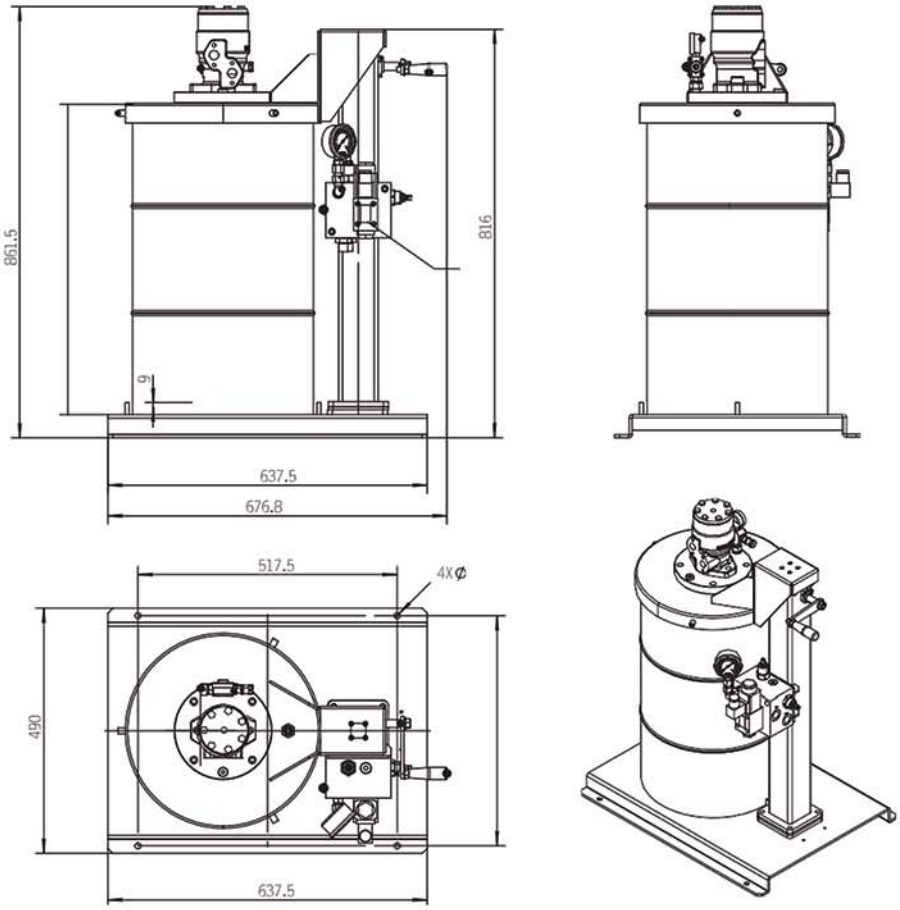

Working principle

MB series divider valve has an internal configuration and flow circuit as shown in the drawings below.
Each valve piston moves sequentially so that problems like piston clogging in a block or blockage in a outlet line cause the whole pistons to stop.

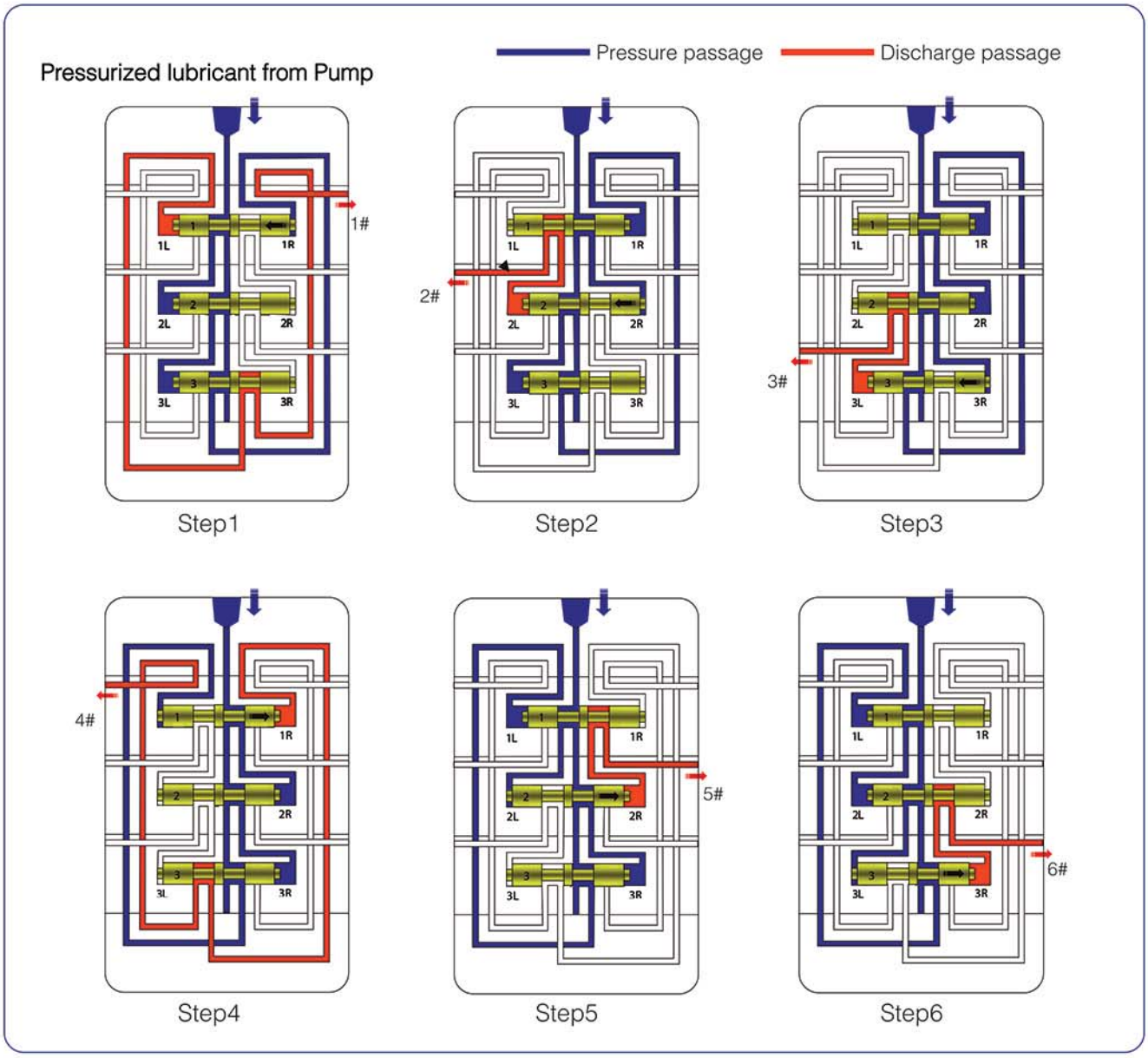

Lubricant pressurized from the pump enters the divider valve through the inlet port of the inlet block.
To begin with, should all the 3 valve pistons are placed in the right ends, incoming lubricant flows into the chambers 1R, 2L and 3L.

Step 1 Lubricant connected to Chamber 1R pushes the piston 1 to the left end while piston 2 and 3 are locked. As the piston 1 goes from right to left, the lubricant in the chamber 1L is discharged through outlet #1.

Step 2 When the piston 1 stops at the left end, the lubricant becomes connected to Chamber 2R and moves piston 2 from right to left discharging lubricant in the chamber 2L through outlet #2.

Step 3 When the piston 2 stops at the left end, now the lubricant becomes connected to Chamber 3R and moves piston 3 from right to left discharging the lubricant in the chamber 3L through outlet #3 Now all the pistons are located in the left ends

Step 4, 5, & 6 The pistons move in adverse directions hereafter. therefore the lubricant is discharged through outlet #4, #5 and #6.

As long as lubricant is supplied to the divider valve, above steps 1 through 6 are repeated continuously.

www.dingyi-fluid.com
E-mail:sales@dingyifluid.com

Technical data

item \ model		DY-MBJ	DY-MBM	DY-MBX	DY-MBZ
Max. pressure（BAR）		250	300		
Max. working cycle	no indicator	200 Cycle/min			
	indicator	60 Cycle/min			
qty. of valves		Min.3~Max.8			
number of outlet		Min.2~Max.16			
Max. output（Oil ISO VG 32）		280 cc/min	550 cc/min	2.3 L/min	9.5 L/min
inlet thread	standard	PT 1/8"	PT 1/4"	PT 3/8"	PT 1/2"
	option	PF 1/8"	PF 1/4"	PF 3/8"	PF 1/2"
outlet thread	standard	PT 1/8"	PT 1/8"	PT 1/4"	PT 3/8"
	option	PF 1/8"	PF 1/8"	PF 1/4"	PF 3/8"
bolts and nuts		M5x40L	M6x45L	M8x60L	M12x70L
		4 ea	4 ea	4 ea	4 ea
bolts	valve	M5x30L	M6x30L	M8x45L	M10x60L
	cross-port plate	M5x35L	M6x50L	M8x50L	M10x70L
	bridge plate	M5x30L	M6x30L	M8x45L	M10x60L
weight	valve block	0.22	0.31	1.01	2.46
	inlet block	0.43	0.60	2.15	4.51
	base block	0.23	0.27	1.00	2.33
	end block	0.43	0.61	2.17	4.53
temperture range	standard	NBR O-ring:-20~+100℃			
	option	Viton O-ring:-40~+200℃			
materials	standard	steel with zinc plated			
	option	steel with chrome plated，SUS304,SUS316			
Lubricants		Oil synthetic lubricans to be checked for compatibility O-ring material.Grease: up to NLGI#2			

Outputs of Valve Blocks

valve size	output cc/piston cycle		available range			
	T	S	DY-MBJ	DY-MBM	DY-MBX	DY-MBZ
2.5	0.041	0.082	●			
5	0.082	0.164	●	●		
7.5	0.123	0.246	●	●		
10	0.164	0.328	●	●		
15	0.246	0.492	●	●		
20	0.328	0.656	●	●		
25	0.410	0.820		●	●	
30	0.492	0.984		●		
35	0.575	1.150		●		
40	0.656	1.312		●		
50	0.820	1.640			●	
75	1.230	2.460			●	
100	1.640	3.280			●	
125	2.050	4.100			●	
150	2.460	4.920			●	●
300	4.920	9.840				●
450	7.380	14.76				●
600	9.840	19.68				●

Wrench Bolt Torques for Valve Blocks(kgf/cm2)

DY-MBJ		DY-MBM		DY-MBX		DY-MBZ	
model	torque	model	torque	model	torque	model	torque
DY-MBJ-3	200	DY-MBM-3	200	DY-MBX-3	250	DY-MBZ-3	250
DY-MBJ-4	200	DY-MBM-4	200	DY-MBX-4	250	DY-MBZ-4	250
DY-MBJ-5	200	DY-MBM-5	200	DY-MBX-5	250	DY-MBZ-5	250
DY-MBJ-6	200	DY-MBM-6	200	DY-MBX-6	250	DY-MBZ-6	250
DY-MBJ-7	200	DY-MBM-7	200	DY-MBX-7	250	DY-MBZ-7	250
DY-MBJ-8	200	DY-MBM-8	200	DY-MBX-8	250	DY-MBZ-8	250

Tie Bolt Torques for Base Assy(kgf/cm2)

DY-MBJ		DY-MBM		DY-MBX		DY-MBZ	
model	torque	model	torque	model	torque	model	torque
DY-MBJ-3	100	DY-MBM-3	150	DY-MBX-3	250	DY-MBZ-3	350
DY-MBJ-4	100	DY-MBM-4	150	DY-MBX-4	250	DY-MBZ-4	350
DY-MBJ-5	100	DY-MBM-5	150	DY-MBX-5	250	DY-MBZ-5	350
DY-MBJ-6	100	DY-MBM-6	150	DY-MBX-6	250	DY-MBZ-6	350
DY-MBJ-7	100	DY-MBM-7	150	DY-MBX-7	250	DY-MBZ-7	350
DY-MBJ-8	100	DY-MBM-8	150	DY-MBX-8	250	DY-MBZ-8	350

Dimension

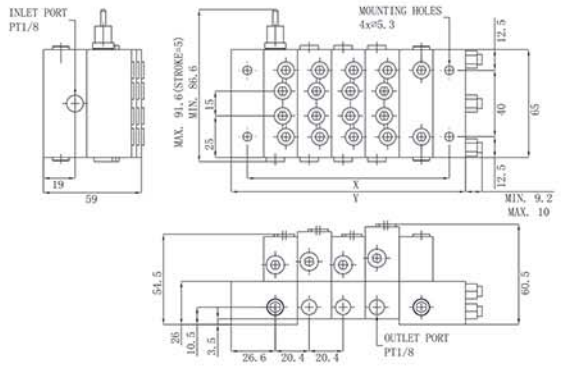

Model	X	Y	connection thread	weight（kg）
DY-MBJ-3	79.4	100.4	.PT（standard） Inlet:PT 1/8" Outlet:PT 1/8" .PF（option）Inlet:PF 1/8" Outlet:PF 1/8"	1.77
DY-MBJ-4	99.8	120.8		2.20
DY-MBJ-5	120.2	141.2		2.63
DY-MBJ-6	140.6	161.6		3.06
DY-MBJ-7	161.0	182.0		3.50
DY-MBJ-8	181.4	202.4		3.93

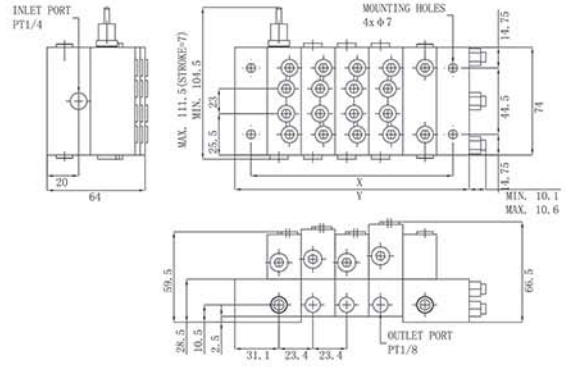

model	XX	Y	connection thread	weight（kg）
DY-MBM-3	90.8	115.4	.PT（standard） Inlet:PT 1/4" Outlet:PT 1/8" .PF（option）Inlet:PF 1/4" Outlet:PF 1/8"	2.53
DY-MBM-4	114.2	138.8		3.16
DY-MBM-5	137.6	162.2		3.79
DY-MBM-6	161.0	185.6		4.42
DY-MBM-7	184.4	209		5.04
DY-MBM-8	207.8	232.4		5.67

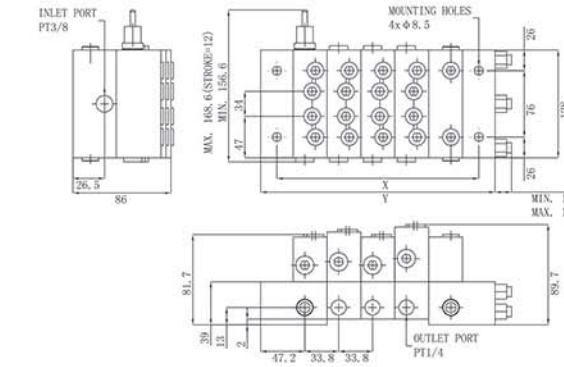

model	X	Y	connection thread	weight（kg）
DY-MBX-3	134.0	167.8	.PT（standard） Inlet:PT 3/8" Outlet:PT 1/4" .PF（option）Inlet:PF 3/8" Outlet:PF 1/4"	8.90
DY-MBX-4	167.8	201.6		11.08
DY-MBX-5	201.6	235.4		13.27
DY-MBX-6	235.4	269.2		15.45
DY-MBX-7	269.2	303		17.63
DY-MBX-8	303.0	336.8		19.81

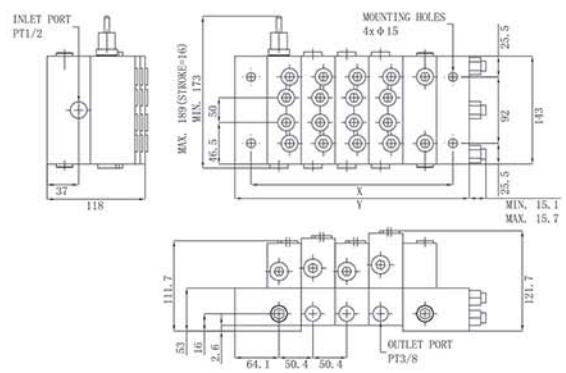

model	X	Y	connection thread	weight（kg）
DY-MBZ-3	192.4	238.4	.PT（standard） Inlet:PT 1/2" Outlet:PT 3/8" .PF（option）Inlet:PF 1/2" Outlet:PF 3/8"	19.69
DY-MBZ-4	242.8	288.8		24.98
DY-MBZ-5	293.2	339.2		30.27
DY-MBZ-6	343.6	389.6		35.56
DY-MBZ-7	394.0	440.0		40.85
DY-MBZ-8	444.4	490.4		46.14

Scaled comparison of Valve Models

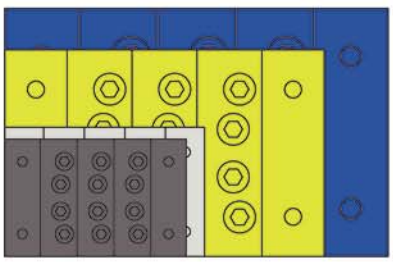

DY-MB*-3

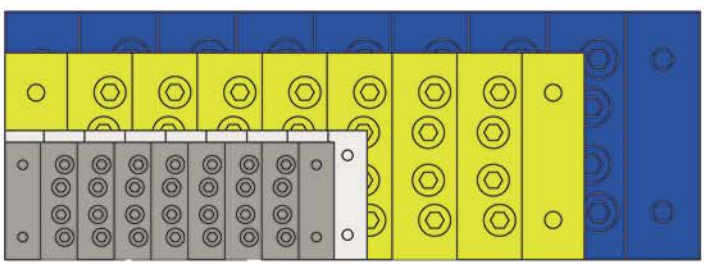

DY-MB*-8

Order code

XX-XXX-X-X-X-X-XX-[(XXX XX XX XX XX) + ( ) + + • • •]

- **Types of divider valve**
  DY-MBJ,DY-MBM,
  DY-MBX,DY-MBZ
- **Number of Valve Blocks**
  3, 4, 5, 6, 7, 8
- **Material**
  None: Steel with Zinc plated (standard)
  CR: Steel with Chrome plated
  U4: SUS304 U6: SUS316
- **Connection Threads**
  None: BS PT(standard) F: PF N: NPT
- **O-rings**
  None: NBR(standard) V: Viton
- **Blockage Indicator**
  None: without indicator
  RI: Reset Indicators on All Working Outlet Ports
  AR: Auto Relief Indicators on All Working Outlet Ports
- **Valve Block Size**
  2.5, 5, 7.5, 10, 15, 20, 25, 30, 35, 40, 50, 75, 100,
  125, 150, 300, 450, 600, I(idle block)
  ⚠ Idle block is applicable with min. 3 valve blocks
- **Valve Block Type & Base Block Port Configuration**
  T: Twin type, Both ports of base block open, Bridge plate can be used in regard to downstream port configuration.
  TR: Twin type, Right side port open, Left side port plugged, with cross-port plate or BR type bridge plate(or right side bridged)
  TL: Twin type, Left side port open, Right side port plugged, with cross-port plate or BL type bridge plate(or left side bridged)
  TP: Twin type, Both ports of base block plugged, with cross-port plate(and either side bridged) or
  BT type bridge plate
  SR: Single type, Right side port open, Left side port plugged, BR type bridge plate can be used in regard to downstream.
  SL: Single type, Left side port open, Right side port plugged, BL type bridge plate can be used in regard to downstream.
  SP: Single type, Both ports of base block plugged, with BR or BL type bridge plate.
  ⚠ A single type valve block is marked with "S" on top face. .
  ⚠ A twin type valve block requires both outlet ports to be open but allows "TL", "TR" or "TP" type with cross-port plate or bridge plate. .
  ⚠ A single type valve block requires either of outlet ports to be open but allows "SP" type with bridge plate.
- **Cross-port Plate**
  None: without cross-port plate CP: with cross-port plate .
  ⚠ Cross-port plate is applicable to Twin type valve block
- **Bridge Plate**
  None: without bridge plate BR: Right side type
  BL: Left side type BT: Both side type .
  ⚠ Bridge plate is not applicable to inlet block
  ⚠ BT type bridge plate is not applicable to Single type valve block
- **Monitoring Devices**
  None: without indication device
  IR: Indicator Pin(=IP) at Right hand side, IL: IP at Left hand side
  CR: Piston Contact Switch(=CS) at Right hand side, CL: CS at Left hand side
  LR: Limit Switch(=LS) at Right hand side, LL: LS at Left hand side
  PR: Proximity Switch(=PS) at Right hand side, PL: PS at Left hand side

●Notes

1. Assembly of divider valve is de-scribed with viewing from inlet block at top downwards to end block at bottom.
2. A twin type valve block must be fitted to the base block of which both outlet ports are open. If either one of 2 ports is plugged, the valve block can not work.
3. A single type valve block must be fitted to the base block of which either outlet port is open and the other is plugged.
4. Lubricant output from the outlet port of a base block should not be diverged to 2 or more lines.
5. A divider valve must consist of min. 3 through max. 8 valve blocks. Consult factory if more than 8 valve blocks are required.
6. It is recommended that multi-stage arrangement of divider valves do not go over 3 stages.
7. It is recommended that reset indicators and auto relief indicators are installed on the top faces of valve blocks.
8. The working pressures of reset indicators and auto relief indicators should be specified on ordering.
9. A cross-port plate can be attached to only "T" type valve block.
10. A bridge plate connects the valve block to which the plate is attached and the adjacent valve block at downwards.
11. Besides divider valve assemblies at factory, all components including blocks, plates and accessories sell respectively for replacement and assemblage at buyer's side.
12. As shown in page 13, pictorial description is very useful for specifying MB series divider valves.

Pictorial Description

MB series divider valves can be described with following pictorial symbols. Pictorial description is helpful for easy understanding of the configuration and clear ordering of specified requirements.

Symbols	Description
20	Valve block
I	Idle block
⟷	Valve block with cross-port plate
↓	Valve block with BL type bridge plate
↓	Valve block with BR type bridge plate
↓ ↓	Valve block with BT type bridge plate
⇓	Lubricant input
→	Outlet port open
X	Outlet port plugged
O	Reset indicator
◎	Auto relief indicator
⊏—	Indicator pin
L/S	Limit switch with indicator pin
C/S	Piston contact switch ass'y
P/S	Proximity switch with indicator pin

※ An Example of Order Code

A MBM type divider valve composed of BSPT threads, standard NBR o-rings, 1 idle block, 6 valve blocks, reset indicators on all working outlets. Valve blocks are as follows:

- Idle block
- 20 size twin type with indicator pin on the right side
- 15 size single type with BL type bridge plate and both outlet ports of base block plugged
- 20 size twin type with BR type bridge plate, right side outlet port plugged and left side open
- 30 size single type with BR type bridge plate, right side outlet port open and left side plugged
- 10 size twin type, right side outlet port plugged and left side open
- 5 size twin type with cross-port plate, right side outlet port open and left side plugged

☞ Order Code :

DY-MBM-6-RI-(I+20TIR+15SPBL+20TLBR+30SRBR+10TL+5TRCP)

※ Pictorial Description

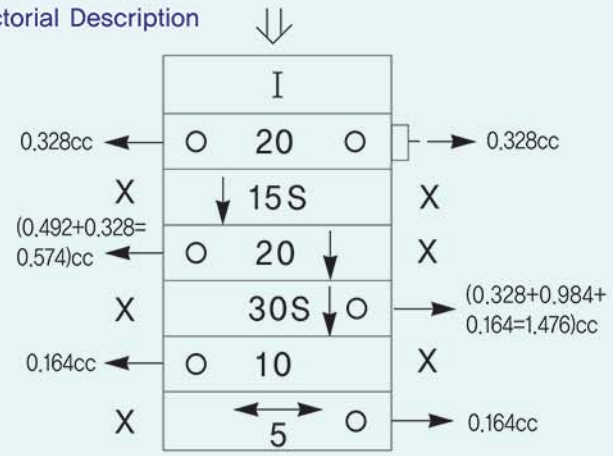

Cross-port Plate

converts a twin type valve block to single type by combining two outlets of the twin type valve.

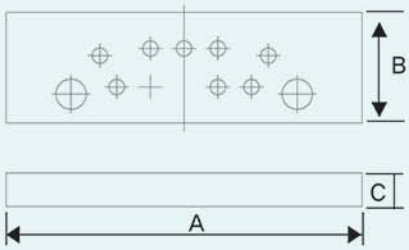

Model	A	B	C
CPBJ	65	20	6
CPBM	74	23	7
CPBX	128	33.4	8
CPBZ	143	50	10

Bridge Plate

combines the outlets of two adjacent valve blocks(a valve block and downstream one). Three types are available: BT type for both side outlets, BR type for right side outlets, BL type for Left side outlets.

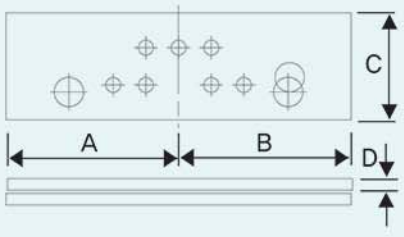

Model	BT	BT		BR		C	D	Note. "**" means BT, BL or BR
	A=B	A	B	A	B			
BPBJ-**	32.5	31	32.5	32.5	31	20	2.5	
BPBM-**	37	35.5	37	37	35.5	23	2.5	
BPBX-**	64	62.5	64	64	62.5	33.4	2.5	
BPBZ-**	71.5	70	71.5	71.5	70	50	2.5	

www.dingyi-fluid.com
E-mail:sales@dingyifluid.com

Accessories

Indicator Pin Assembly

The indicator pin is used for visual check of divider valve performance and cycle counting. With limit switch or proximity switch, movement of indicator pin can be monitored electrically.

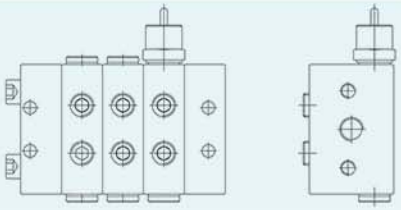

model	valve type
IP-BJ	DY-MBJ
IP-BM	DY-MBM
IP-BX	DY-MBX
IP-BZ	DY-MBZ

Piston Contact Switch Assembly

The piston contact switch assembly is a monitoring device which electrically detects the movement of piston so that an automatic control system counts cycles of valve piston and checks if divider valves work properly or line blockage/leakage occurs.
The assembly is composed of a sensor plug and a switch housing.
Applicable voltage range: 24VDC, 110VAC and 220VAC

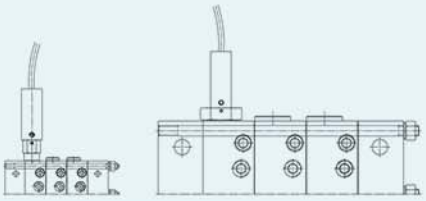

model	valve type
LS-M	DY-MBM
LS-X	DY-MBX
LS-Z	DY-MBZ

Limit Switch Assembly

The limit switch assembly is a monitoring device which electrically senses the movement of indicator pin so that an automatic control system counts cycles of valve piston and checks if divider valves work properly or line blockage/leakage occurs.
The assembly is composed of a limit switch, a mounting bracket and an indicator pin.
Applicable voltage range: 24VDC, through 220VAC

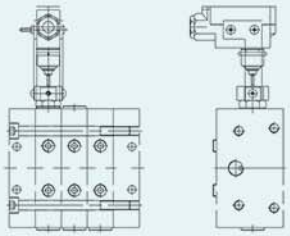

model	valve type
MS-J	DY-MBJ
MS-M	DY-MBM

Proximity Switch Assembly

A proximity switch assembly provides same functions as limit switch assembly.
The assembly is composed of a proximity switch, a mounting bracket and an indicator pin.
Available in 24VDC, 110VAC and 220VAC

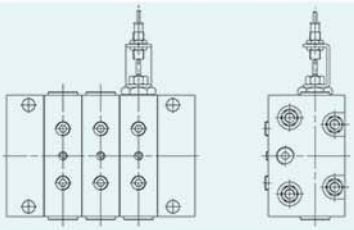

model	valve type
PS-M	DY-MBM
PS-X	DY-MBX
PS-Z	DY-MBZ

Reset Indicator

The reset indicator is a visual monitoring device that shows the location under over pressure.
Reset indicators are installed on the top face of valve blocks.
In an progressive system, when over pressure is produced due to the piston locked in the bore of a valve block or due to blockage in a feed line, the whole divider valves do not work and the pin of the reset indicator connected to the over pressure comes out.
The pin does not go back as long as over pressure is not removed.
Various working pressures are available.

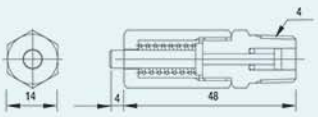

model	working press.	:connection thread
AR050	50bar	.P1:PT1/8 for DY-MBJ,DY-MBM .P2:PT1/4 for DY-MBX,DY-MBZ .F1:PF1/8 for DY-MBJ,DY-MBM .F2:PF1/4 for DY-MBX,DY-MBZ . A busing(male PT3/8 . female PT1/4 or male PF3/8 . female PF1/4 or male NPT3/8 . female NPT1/4) is required for DY-MBZ connection port.
AR070	70bar	
AR100	100bar	
AR125	125bar	
AR150	125bar	
AR240	240bar	

Auto Relief Indicator

The auto relief indicator is a visual monitoring device like the reset indicator. But an auto relief indicator shows the location under over pressure by bleeding lubricant unlike the reset indicator.
With auto relief indicators the divider valves keeps working in spite of over pressure unless over pressure is caused due to a locked piston.
It is not recommended to use the auto relief indicators outdoors because lubricant comes out of the divider valves.

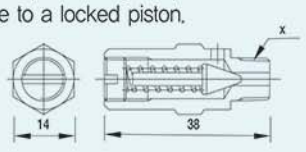

model	working press.	:connection thread
RI010	10bar	.P1:PT1/8 for DY-MBJ,DY-MBM .P2:PT1/4 for DY-MBX,DY-MBZ .F1:PF1/8 for DY-MBJ,DY-MBM .F2:PF1/4 for DY-MBX,DY-MBZ . A busing(male PT3/8 . female PT1/4 or male PF3/8 . female PF1/4 or male NPT3/8 . female NPT1/4) is required for DY-MBZ connection port.
RI015	15bar	
RI020	20bar	
RI030	30bar	
RI050	50bar	
RI070	70bar	
RI100	100bar	
RI170	170bar	
RI260	260bar	

Identification chart

Examples:

DY-SSV 6
DY-SSV 10 - K 1.4305
DY-SSV 6 S - KN - RV6 + RVV6 GEKV6

XX-XXX XX X - XX - XXX + XXXX XXXXXXX XX XXXXXX

• Series:

DY-SSV: DY-SSV series

• Number of outlets:

6-22

• Type of outlet fitting:

Blank :screw type
S :push-in type

• Monitoring:

Blank :no monitoring
K :with indicator pin
KN :with indicator pin and proximity switch
N :with piston detector (3-wire, with cable)

• Outlet fittings:

Blank :Standard metering device without mounted outlet fitting
RV6 :Check valve for tube Ø6 mm, screw type
For（SSV...S type）:
RV6 :check valve for tube Ø6 mm, push-in type, knurled pliers
RVV6 :check valve for tube Ø6 mm, push-in type, reinforced pliers

• Inlet fittings:

GE6/8/10: inlet fitting, screw type for tube Ø6, 8 or 10 mm
WE6/8/10: inlet fitting, screw type for tube Ø6, 8 or 10 mm
GEKV6 : push-in fitting, for main and secondary metering devices always with reinforced pliers
WEKV6 : push-in fitting, for main and secondary metering devices always with reinforced pliers

• Special Designs:

A :design with 1/8 NPTF internal thread
Ex :Switch, explosion-proof

• Material:

Blank :standard design (steel)
1.4305 :steel V2A
1.4571 :steel V4A

Attention:
Mixed combinations of outlet fittings and and inlet fittings are possible:
- Push-in type inlet fittings &screw type outlet fittings
- Push-in type outlet fittings &screw type inlet fittings

www.dingyi-fluid.com
E-mail:sales@dingyifluid.com

Technical data

Specifications	DY-SSV
structure	integrated progressive valves
number of outlets	6-22
Lubricant	grease： up to NLGI2
	Oil：above viscosity 40cSt
cc/cycle	0.2cc
operating pressure	20-350bar（max.）
max. pressure difference of between two outlets	100bar
inlet	G1/8
outlet connecting tube or hose	ϕ4、ϕ6
outlet	M10x1
working temperature	-25 to +70°C
Materials	Carbol steel+black chrome plating、stainless

Spanner tighting torque

piton plug（M11x1）		10Nm
outlet plug（M10x1）		10Nm
hex.outlet plug（M10x1）		10Nm
inlet connector	Ferrule	17Nm
	quicker	10Nm
outlet connector	Ferrule	10Nm
	quicker	8Nm
inlet connector locking nuts		10Nm
outlet nuts	stainless	10Nm
	hose（low pressure ①）	5Nm
indicator pin		12Nm
piston		12Nm
sensor		12Nm
tighting bolts		10Nm

Dimension

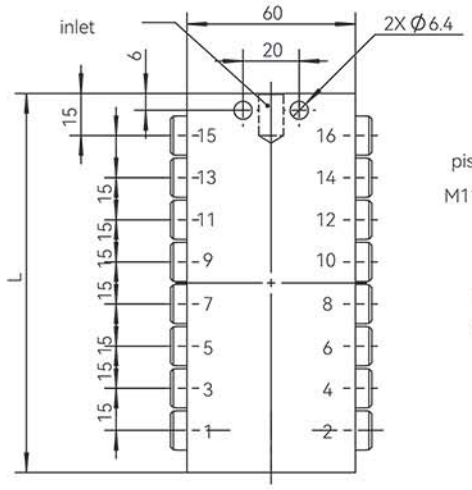

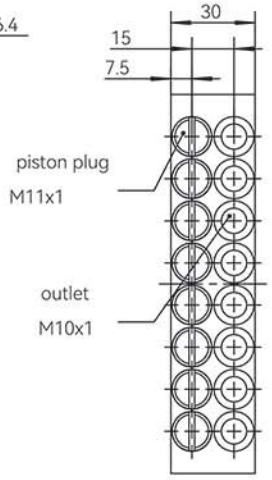

Model	L（mm）)	thread
DY-SSV-6	60	inlet:G 1/8" outlet:M10x1
DY-SSV-8	75	
DY-SSV-10	90	
DY-SSV-12	105	
DY-SSV-14	120	
DY-SSV-16	135	
DY-SSV-18	150	
DY-SSV-20	165	
DY-SSV-22	180	

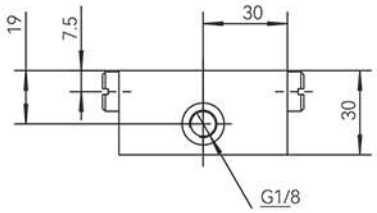

Attention:
In the case of the progressive metering devices models SSV6-22 the outlets 1 and/or 2 must never be closed, otherwise the system would block owing to the structure of the metering device.

Identification chart

Examples:

DY-SSVL 6
DY-SSVL 10 - K 1.4305
DY-SSVL 6 S - KN - RV6 + RVV6 GEKV6

XX-XXX XX X - XX - XXX + XXXX XXXXXXX XX XXXXXX

• Series:

DY-SSVL: DY-SSVL series

• Number of outlets:

6-14

• Type of outlet fitting:

Blank :screw type
S :push-in type

• Monitoring :

blank :no monitoring
K :with indicator pin
KN :with indicator pin and proximity switch
N :with piston detector (2-wire, with cable)

• Outlet fittings:

Blank :Standard metering device without mounted outlet fitting
RV6 :Check valve for tube Ø6 mm, screw type
For（SSV...S type）:
RV6 :check valve for tube Ø6 mm, push-in type, knurled pliers
RVV6 :check valve for tube Ø6 mm, push-in type, reinforced pliers

• Inlet fittings:

GEKV6 : push-in fitting, for main and secondary metering devices always with reinforced pliers
WEKV6 : push-in fitting, for main and secondary metering devices always with reinforced pliers

• Special Designs:

• Material:

blank :standard design (steel)
1.4305 :steel V2A
1.4571 :steel V4A

Attention:
Mixed combinations of outlet fittings and and inlet fittings are possible:

- Push-in type inlet fittings & screw type outlet fittings
- Push-in type outlet fittings & screw type inlet fittings

www.dingyi-fluid.com
E-mail:sales@dingyifluid.com

Technical data

Specifications	DY-SSVL
structure	integrated progressive valves
number of outlets	6-14
Lubricant	grease：up to NLGI2
	Oil：above viscosity 40cSt
	0.2cc
operating pressure	20-350bar（max.）
max. pressure difference of between two outlets	100bar
inlet	R1/4
outlet connecting tube or hose	Φ6、Φ8、Φ10、Φ12
outlet	1/4"
working temperature	-25 to +70°C
Materials	Carbol steel+black chrome plating、stainless

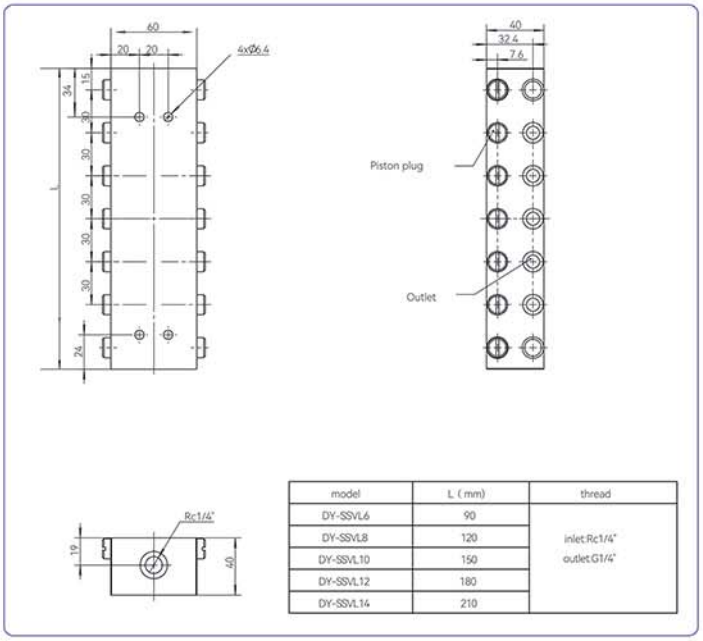

model	L（mm）	thread
DY-SSVL6	90	inlet:Rc1/4" outlet:G1/4"
DY-SSVL8	120	
DY-SSVL10	150	
DY-SSVL12	180	
DY-SSVL14	210	

Left outlets			Right outlets		
Output	No.	Metering	Output	No.	Metering

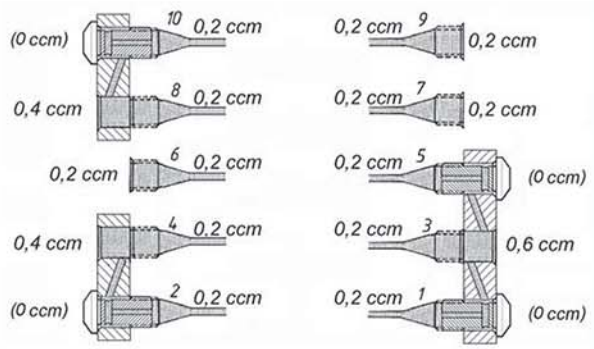

Multiple lubricant outputs

For combining lubricant volumes externally (double, triple,quadruple or quintuple lubricant volume)use a connecting bar , outlet closure screw(s)) and the outlet tube fitting (incl. integrated check valve) and a straight outlet fitting ((1/4 ")) with the necessary tube fitting.

Depending on the connecting bar, 2, 3, 4 or 5 adjacent outlet bores (1-3-5-7-9 or 2-4-6-8-10) can be combined in order to obtain two (L2), three (L3), four (L4) or five (L5) outlet volumes at the open outlet. Multiple lubricant outputs 0.2 ccm accumulate accordingly .

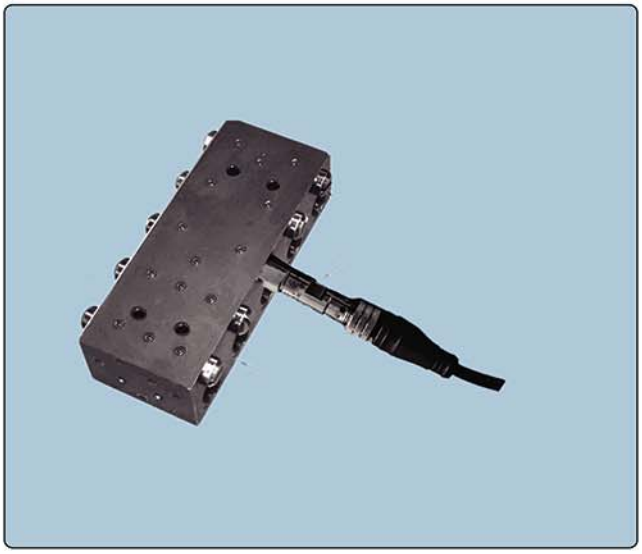

Electrical monitoring

A piston detector (initiator)) lubricating time and brings it to a close after all the pistons of this metering device have dispensed their lubricant quantity.
If there is a blockage in the system or if the pump reservoir is empty, the piston detector can no longer record the piston movements. The switching off signal is not transmitted to the control unit. A fault signal occurs.

The whole system can be monitored visually via the pressure relief valve of the pump. If lubricant is leaking at the pressure relief valve during the distribution sequence, this indicates that there is a blockage in the system.

Outline

A metering valve is a dividing valve which makes the grease discharged from pump flow into numbers of lubrication points in measured volume.

The DV series metering valves are used generally in dual line centralized lubrication system. The metering valves feed exactly measured amount of lubricant to the points through the function of adjustment of discharge volume.



Order code

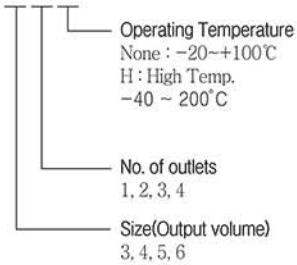

Function

The metering valve has fundamental functions below. Refer to the principle of operation for detail explanation.

1. Delivery in measured volume
   The lubricant inside measuring chamber is delivered to lubrication points in fixed quantity by the up-downward movement of measuring piston.
2. Adjustment of grease volume.
   It is possible to adjust the quantity of lubricant according to the required volume of each lubrication points. The delivery quantity is adjusted by adjusting the stroke of the measuring piston with adjusting screw.

Specification

Model		DV-3*	DV-4*	DV-5*	DV-6*
Max.Input Pressure (kgf/cm²)		350			
Min. Operating Press(kgf/cm²)		18	18	15	12
Output Volume (cc/stroke)	Max.	1.2	2.5	5.0	14.0
	Min.	0.12	0.28	0.38	0.86
Output adjustment(cc) per roation of adjusting screw		0.06	0.1	0.15	0.68
Loss(cc):grease quantity required for operation of pilot piston		0.5	0.55	0.63	0.63
Accessories : 2 set of Hex. Bolt, nut and S/W		M8×60L	M8×60L	M8×65L	M8×70L
Temperature range		Standard: −20~100℃, High Temp: −40~200℃			

Weight

Model	DV-31	DV-32	DV-33	DV-34	DV-41	DV-42	DV-43	DV-44
(kg)	0.7	1.3	1.8	2.3	1.1	1.8	2.4	3.2
Model	DV-51	DV-52	DV-53	DV-54	DV-61	DV-62	DV-63	DV-64
(kg)	1.4	2.5	3.5	4.5	2.3	4.1	5.9	7.7

Sectional View



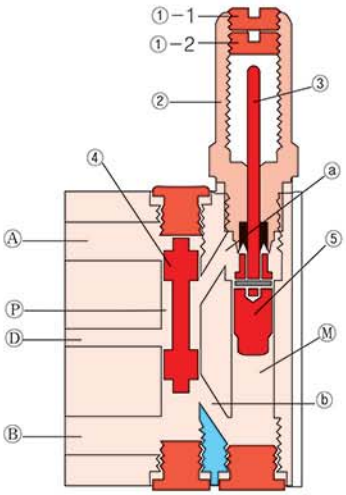

Symbol	DESCRIPTION
①−1	Fixing Bolt
①−2	Adjusting Screw
②	Indicator Housing
③	Indicating Rod
④	Pilot Piston
⑤	Measuring Piston
Ⓐ	Inlet Port
Ⓑ	Inlet Port
Ⓓ	Outlet Port
Ⓜ	Measuring Chamber
Ⓟ	Pilot Chamber
ⓐ	Path
ⓑ	Path

www.dingyi-fluid.com
E-mail:sales@dingyifluid.com

Principle of Operation

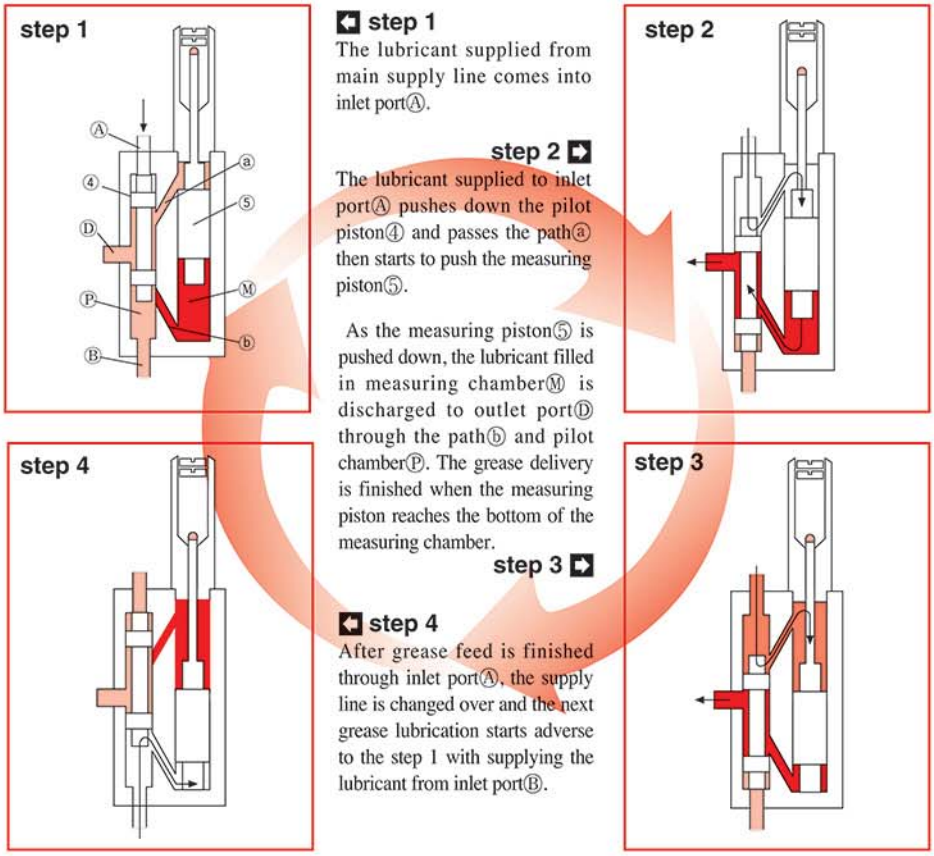

step 1
The lubricant supplied from main supply line comes into inlet portⒶ.

step 2
The lubricant supplied to inlet portⒶ pushes down the pilot piston④ and passes the pathⓐ then starts to push the measuring piston⑤.

As the measuring piston⑤ is pushed down, the lubricant filled in measuring chamberⓂ is discharged to outlet portⒹ through the pathⓑ and pilot chamberⓅ. The grease delivery is finished when the measuring piston reaches the bottom of the measuring chamber.

step 3

step 4
After grease feed is finished through inlet portⒶ, the supply line is changed over and the next grease lubrication starts adverse to the step 1 with supplying the lubricant from inlet portⒷ.

Dimensions

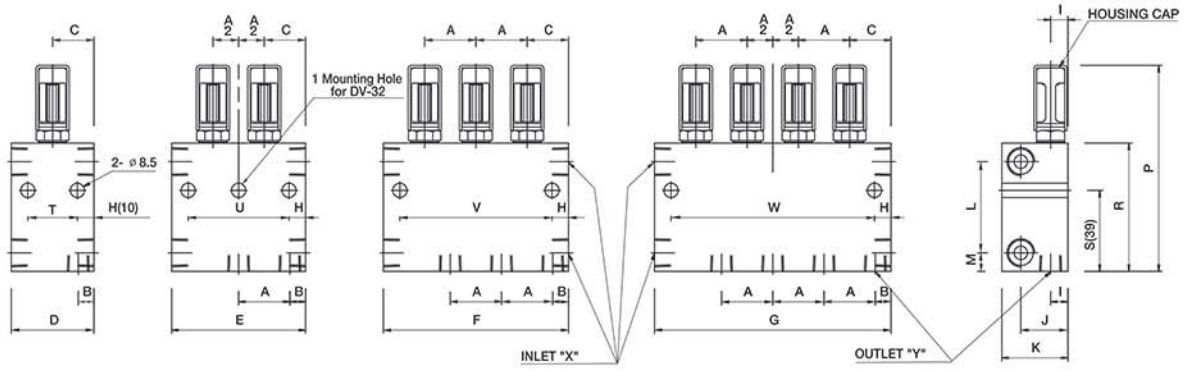

Model	Dimension (m/m)																				Piping(PT)	
	A	B	C	D	E	F	G	+H	I	J	K	L	M	P	R	+S	T	U	V	W	X	Y
DV-31,32,33,34	29	8	22.5	44	73	102	131	36.5	11	27	38	42	11	103	64	41	24	-	29	58	3/8	1/4
DV-41,42,43,44	31	9.5	25	50	81	112	143	10	10.5	28.5	40	54	11	122	76	48	30	61	92	123	3/8	1/4
DV-51,52,53,54	37	9.5	28	53	90	127	164	10	14	34	45	57	13	137	83	53	33	70	107	144	3/8	1/4
DV-61,62,63,64	46	10	33	62	108	154	200	10	20	45	57	57	16	147	89	56	42	88	134	180	3/8	1/4

Outline

The DW series metering valves are used generally for dual line system as much as DV series,
The metering valves feed exactly measured amount of lubricant to the points through the function of adjustment of discharge volume.
There are 2 discharge ports per one cell in contrast to DV metering valve and same volume is discharged from symmetrical ports. The discharge volume of symmetrical 2 discharge ports is adjusted by adjusting screw at the same time, and it is possible to combine 2 port into one discharge port by the outlet port



Order Code

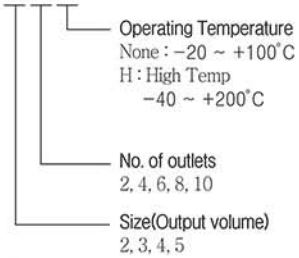

Cautions

1. The DW metering valve is fundamentally composed with even number discharge port. If the number of lubrication point is odd, it is possible to make the number of discharge port odd by means of combining the 2 discharge port to one. At this time, keep the specific procedure in order to block one discharge port(Refer to page 34). if one discharge port is blocked privately, the other symmetric port doesn't discharge the grease.
2. At combining the two discharge port to one, the discharge volume becomes double, so it is required to adjust with grease volume adjusting screw.

Specification

Model		DW-2*	DW-3*	DW-4*	DW-5*
Max. Input Pressure(kgf/cm²)		350			
Min. Operating Press.(kgf/cm²)		20	18	18	15
Output Volume (cc/stroke)	Max.	0.6	1.2	2.5	5.0
	Min.	0.15	0.16	0.23	0.38
Output adjustment(cc) per rotation of adjusting screw		0.04	0.06	0.10	0.15
Loss(cc): grease quantity required for operation of pilot piston		0.17	0.20	0.20	0.20
Accessories : 2 set of Hex. bolt, nut and S/W		M6×60L		M8×75L	
Temperature range		Standard: −20 ~ 100°C, High Temp.: −40 ~ 200°C			

Weight

Model	DW-22	DW-24	DW-26	DW-28	DW-32	DW-34	DW-36	DW-38
(kg)	0.6	0.8	1.0	1.3	1.4	2.4	3.4	4.4
Model	DW-42	DW-44	DW-46	DW-48	DW-52	DW-54	DW-56	DW-58
(kg)	1.4	2.4	3.4	4.4	1.4	2.4	3.4	4.4

Sectional View



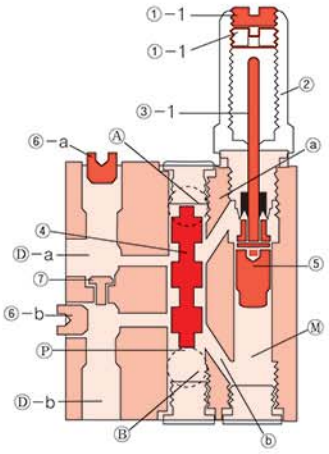

SYMBOL	DESCRIPTION
①−1	Fixing Bolt
①−2	Adjusting Screw
②	Indicator Housing
③	Indicating Rod
④	Pilot Piston
⑤	Measuring Piston
⑥−a	Outlet Port Plug
⑥−b	Outlet Port Plug
⑦	Cross Port Bolt
Ⓐ	Inlet Port
Ⓑ	Inlet Port
Ⓓ−a	Outlet Port
Ⓓ−b	Outlet Port
Ⓜ	Measuring Chamber
Ⓟ	Pilot Chamber
ⓐ	Path
ⓑ	Path

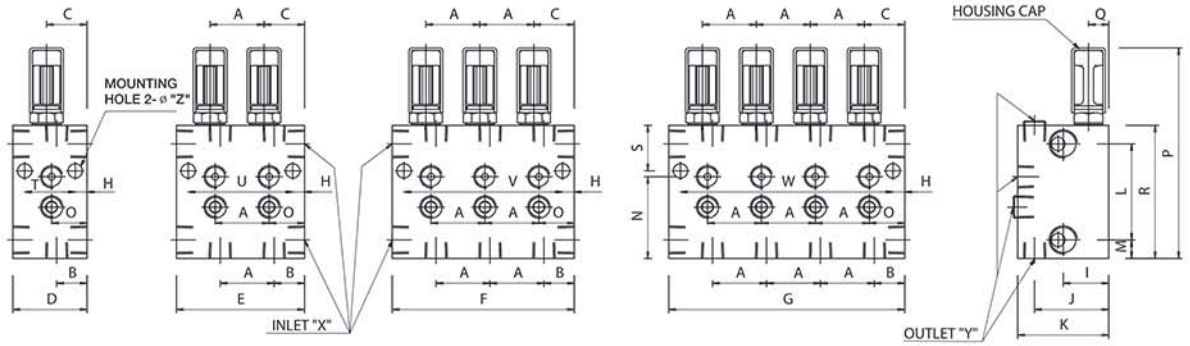

Model	Dimension (m/m)																							Piping(PT)	
	A	B	C	D	E	F	G	H	I	J	K	L	M	N	O	P	Q	R	S	T	U	V	W	Z	X	Y
DW-22,24,26,28	17	18	18	36	53	70	87	6	21	32.5	40	32	11	33	18	83	8	54	27	24	41	58	75	ø7	3/8	1/8
DW-32,34,36,38	32	18	24	44	76	108	140	7	27	44	54	57	11	48.5	21	118	12	79	27	30	62	194	126	ø8.5	3/8	1/4
DW-42,44,46,48	32	18	24	44	76	108	140	7	27	44	54	57	11	48.5	21	125	12	79	27	30	62	194	126	ø8.5	3/8	1/4
DW-52,54,56,58	32	18	24	44	76	108	140	7	27	44	54	57	11	48.5	21	133	12	79	27	30	62	194	126	ø8.5	3/8	1/4

www.dingyi-fluid.com
E-mail:sales@dingyifluid.com

Application

When it comes to eliminate costly, manual point by point lubrication, DY-1 Injectors have proven to be right solution for many applications.

- Mining machinery
- Heavy industry
- Steel machinery
- Paper machinery
- Sugar machinery

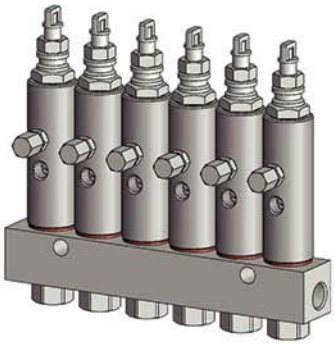

Dimension

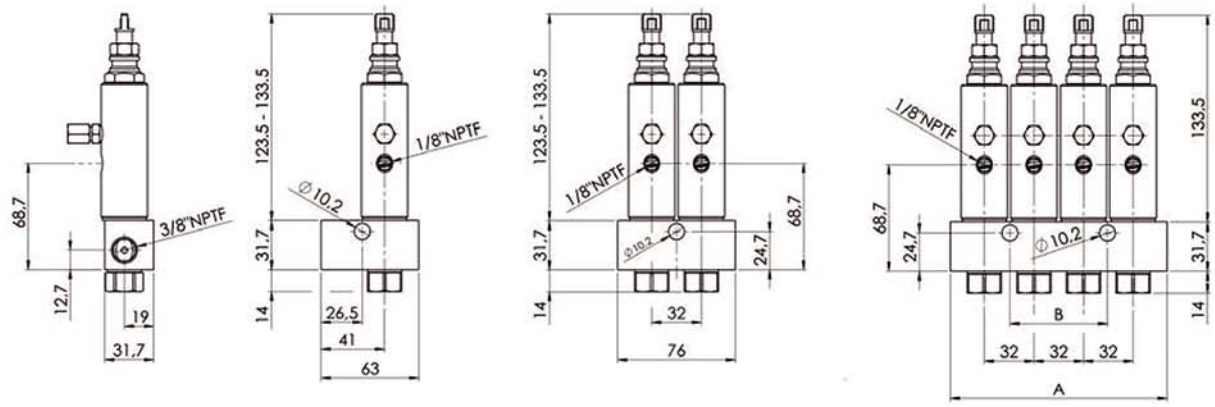

Features:

- For single line central lubrication system
- For dispensing greases with viscosity until 2 NLGI
- Output is externally adjustable
- Indicator stem permits visual check of injector operation
- Individual injectors can be easily removed for inspection or replacement
- Carbon steel injectors
- Viton packings used for heat application

SERIES	Discharge		Operatingpressure			
	Min	Max	Min	Max	Typical	Vent
CX1	0.131cc 0.008cuin.	1.31cc 0.080cuin.	127bar 1850psig	241bar 3500psig	172bar 2500psig	41bar 600psi

Code	Outlets	Dimensions		Manifold	Manifold inlet	Injector outlet
		A	B			
02.940.1.G.01	1	63	-	01.190.1	3/8 NPTF (F)	1/8 NTPF (F)
02.940.1.G.02	2	76	-	01.190.2		
02.940.1.G.03	3	107.5	31.7	01.190.3		
02.940.1.G.04	4	139	63.4	01.190.4		
02.940.1.G.05	5	170.5	95.1	01.190.5		
02.940.1.G.06	6	202	126.8	01.190.6		
02.940.1.G		Replacement for manifoldedinjector				

DY-DU1



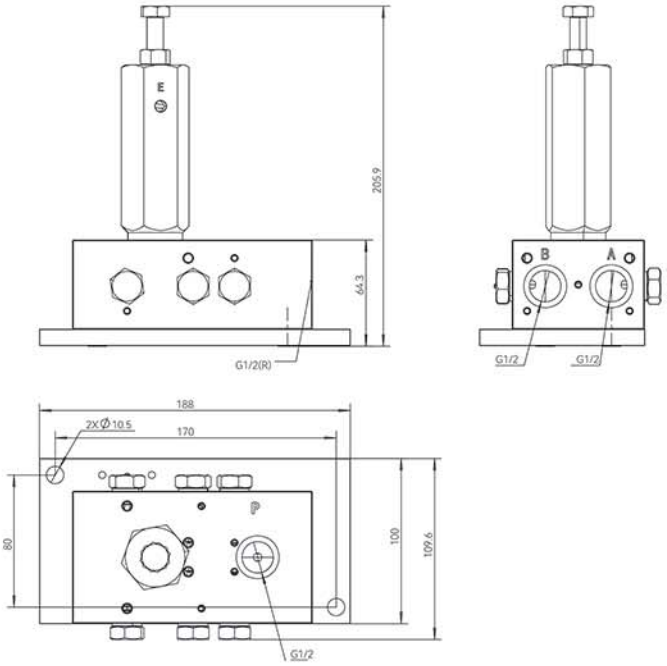

Introduction:

DY-DU1 change-over valves are designed primarily for use in dual-line lubrication systems. These change-over valves alternately discharge lubricant, fed by the pump into one of the two main lines while the other line is connected to the return line connection of the pump. The switching pressure is adjustable.

Features:

- Reliable,even for hard grease
- Change-over process initiated automatically once preset pressure is reached
- Maximum operating pressure of 350 bar.
- Various mounting positions
- Works effectively in temperatures ranging from -20 to +80℃
- optional control switch

Applications:

- Ideal for small, electrically driven dual-line systems that requires minimal monitoring

Technical data:

Function principle..... change-over valve, hydraulic, pressure operated 4/2 way valves

Operating temperature..... 20℃ +80℃
4°F +176°F

Lubricant ..... grease up to NLG1 3.
oil with a viscosity of min 20 mm2/s

Flow rate ..... 14L/h(37gal/h)

Operating pressure ..... max.350bar(5075psi)

Change-over pressure min.140bar

Main line connection ..... G1/2BSPP(F)

Electrical connection max.500V,25 60Hz

Protection class IP67

Dimensions..... depending on the model
min.195x190x100mm
max.195x195x195mm
min.78x78x40in
max.78x78x78in

Mounting position ..... any

DY-DU 1 Change-over valves mounted on a base plate

Order number	Description
DY-DU1 G	with indicator pin
DY-DU1 GK	with proximity switch
DY-DU1 GKN	with indicator pin and limit switch
DY-DU1 GKS	

www.dingyi-fluid.com
E-mail:sales@dingyifluid.com

DY-MF

DY-MF series



Technical data

Model	DY-MF-2-2-C-24	DY-MF-2-2-O-24
lubricant	Oil or up to NLGI3 grease	
Initial state	NC	NO
Diameter	G1/2"	
Function	2-way 2	
Pressure range	0~31.5MPa	
Flow range	0~25L/min	
Working temprature	-20°C to +60°C	
Filter	70μm	
Material	steel、stainless steel	

Symbol

DY-MF-2-2-C-24

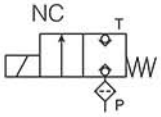

DY-MF-2-2-O-24

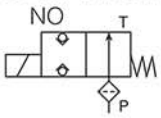

General:

DY-MF solenoid valves are special for high viscosity lubricants. It is used to control the lubricants to open and stop. It consists of valve body, electromagnet and valve housing with filter to keep the lubricants clean.

Features:

- control by electromagnet to change valves directly
- no leakage in NC state
- no delay in high pressure situation
- with filter build-in, 70um

Ordering code

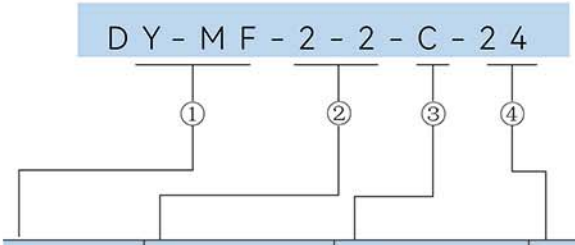

① series	②Function	③Initial state	④voltage
DY-MF	2-2:2 way-2 2-3:2 way-3	C:NC O:NO	24:DC24V

Dimension

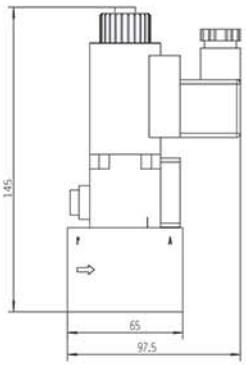

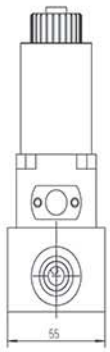

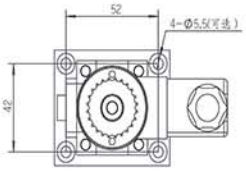

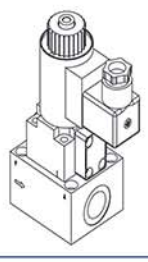

- **DY-MF-2-2-C-24**
- **DY-MF-2-2-O-24**

General

Open gear spray systems are widely used across various industries, including power generation, mining, cement production, and more.
These systems help extend the service life of machinery and equipment, reduce unplanned downtime, and lower maintenance costs.
They are suitable for gears with face widths ranging from 50 mm to 1060 mm.
The systems feature monitoring functions and nozzle purging after shutdown.

Count function

Du1 valves exchange counts

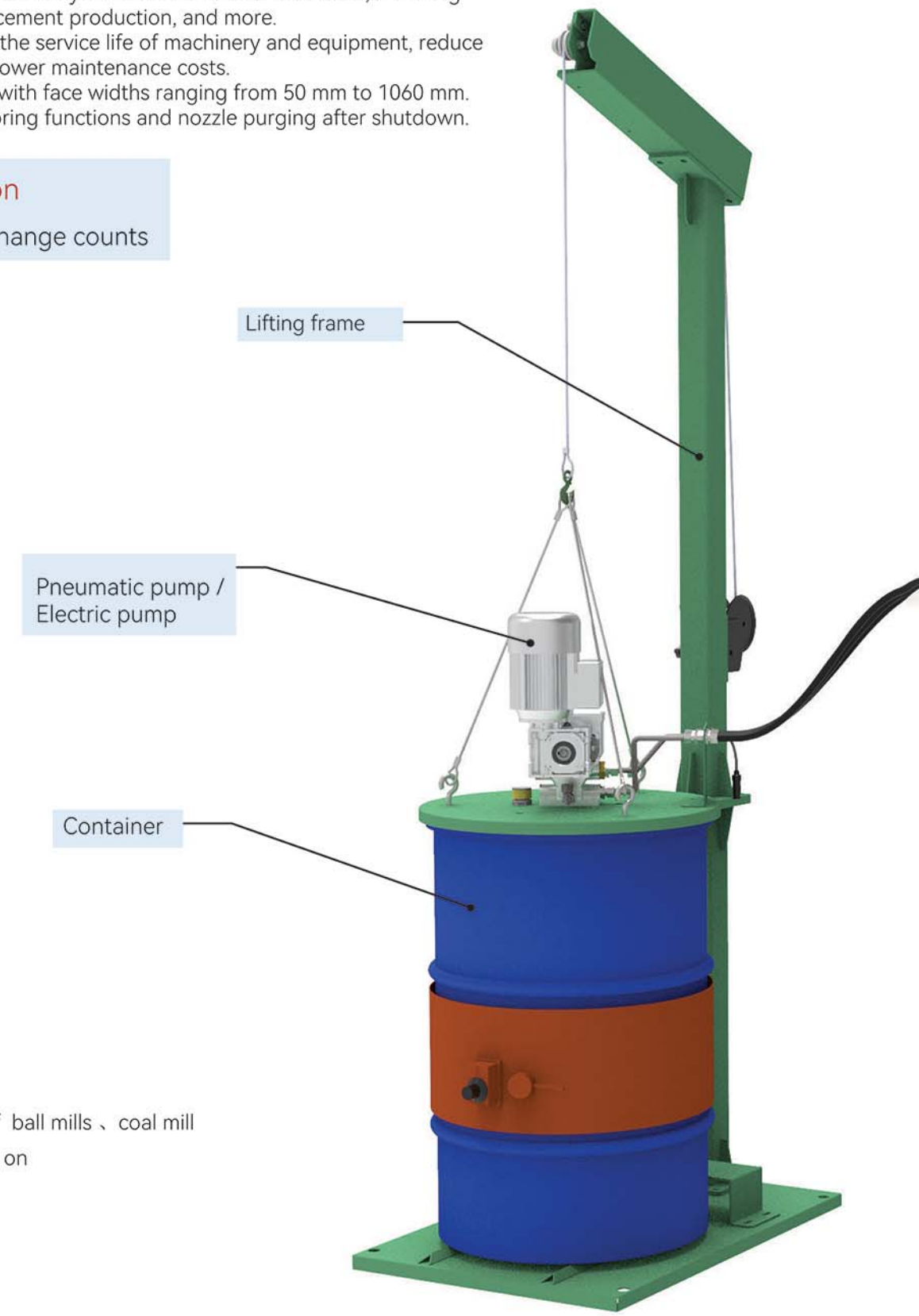

Application:

- apply in the open gear of ball mills 、coal mill
- Rotary kiln、Drier and so on

Working principle

Lubricant is transferred via pumps, valves, filters, and pressure exchange valves, before passing to the dual-line metering device and finally being distributed to the nozzles.
Compressed air is split into two circuits:
One supplies the air motor to drive the pump.
The other is routed to the nozzles, where it mixes with lubricant to spray onto the gear surface.
After the pump stops, compressed air continues to purge the nozzles to keep them clean and prevent clogging.

Monitor function

- Low level
- Air pressure
- Exchange valves
- Metering device

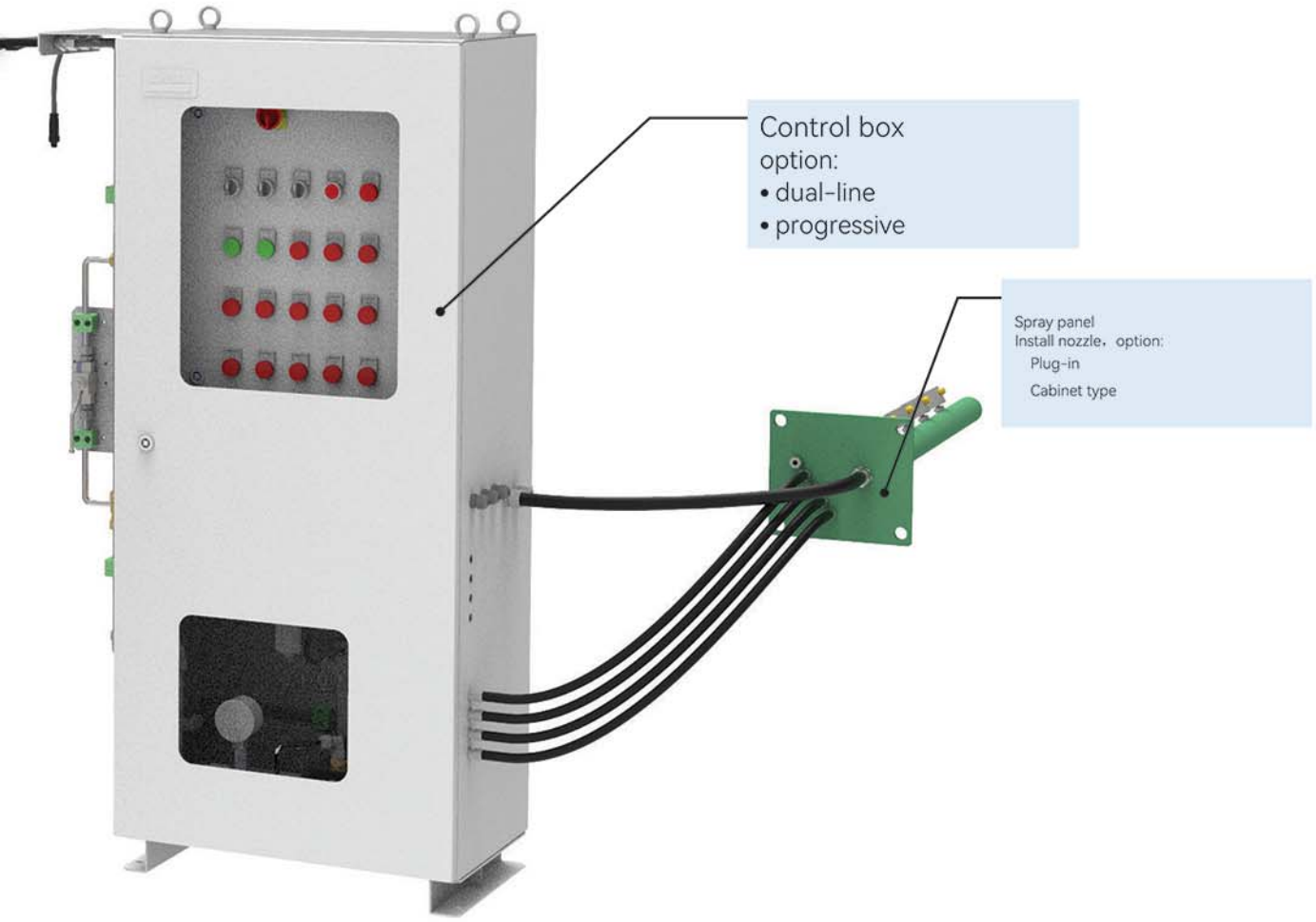



ShangHai DingYi Fluid Technology Co.,Ltd.

Add: Building 1, No. 552 Liancao Road, Shanghai, P.R.China
Tel:021-54241996
Fax:021-64649299
Web:www.dingyi-fluid.com
E-mail:sales@dingyifluid.com