DOS POWER SUPPLY

DBR系列高性能通用型導軌式工業電源

DBR series high performance universal DIN rail industrial power supply



- 功率：75W-500W,足額功率；
- 體積更小，外形美觀，設計新穎；
- 窄面板設計，高轉換效率，可靠性高;
- 軟啓動電流，有效降低瞬間電流衝擊；
- 内置EMI濾波電路，紋波和噪聲較小；
- 國際標準35mm導軌安裝，上下端子接綫；
- 有短路、過載、過熱、過壓等保護功能；
- 具有抑制電網浪湧、抗雷擊等功能；
- 采用國際品牌電源IC芯片，性能穩定；
- 有輸出電壓數顯功能供選擇；
- 出廠100%滿負載老化測試；
- 低溫升，自然散熱（360W為自動風扇散熱）；
- 性價比好，質保期三年。

- Power: 75W-500W, full power.
- Smaller, beautiful appearance, novel design.
- Narrow panel, high efficiency, high reliability.
- Soft-start current, reducing the current impact.
- Built-in EMI filter circuit, ripple and noise smaller.
- DIN rail 35mm mounting, upper and lower terminal wiring.
- Short circuit, overload, overheating, overvoltage protection.
- With suppression of grid surges, anti-lightning function.
- Using international brand power IC chip, stable performance.
- Output voltage digital display for selection.
- Factory 100% full load aging test.
- Low temperature rise, natural cooling (360W for automatic fan cooling).
- Good price, warranty period of three years.

技術指標 Technical indicators

功率(W) Power	75W	100W	120W	160W	200W	250W	360W	500W
殼體材質 Shell material	Aluminum+iron							
輸入電源 AC input	100～240VAC 50/60HZ				115/230VAC±15% selectable by switch 50/60HZ			100～240VAC 50/60HZ
衝擊電流 Electric shock	Cold start,<30A at 220VAC							
輸入漏電流 Input leakage current	<0.5mA							
輸出電壓 Output voltage	See each model for details（Rated output voltage ± 10% adjustable）							
電壓調整率 Voltage regulation	<±1%							
負載調整率 Load Regulation	<±1%							
監視參數 Monitor parameters	非標配Non－Standard，Output voltage							
過載保護 Overload protection	115%～150%，Automatic recovery							
過壓保護 Overvoltage protection	115%～140%，Automatic recovery							
過熱保護 Over temp. protection	Shut down output voltage, recovers automatically after temperature goes down							
冷卻方式 Cooling method	Free air cooling						Auto fan	Free air cooling
耐壓 Withstand pressure	I/P-O/P:3KVA，I/P-FG：1.5KVA，O/P-FG：0.5KVA，1min							
工作環境 Working environment	-10～+50℃（100%load）；Humidity 10%～90%，No condensation.							
儲存環境 Storage environment	-10～+80℃；Humidity 5%～95%，No condensation.							
安全標準 Safety standard	CE-EN60950,UL508,UL60950,TUV-60950							
EMC標準 EMC standard	EN55011,EN55022,EN61000-4-2,3,4,5,6,8,11,EN61000-6-2							
設計使用壽命 Design life	Room temperature 25 hours at 100,000 hours							
外形尺寸(W*H*D) Dimensions	56mm×125mm×100mm				65mm×125mm×100mm			86×125×129mm

型號規格 Model specifications

基本型 Basic series



125(H)×100(D)×56(W)mm



125(H)×100(D)×65(W)mm



125(H)×129(D)×86(W)mm

Model No.	Output	Tol.	R&N	Effi	Power
DBR-75-24	24V 3A	±1%	150mV	90%	75W
DBR-100-24	24V 4.2A	±1%	150mV	90%	100W
DBR-120-12	12V 10A	±1%	100mV	87%	120W
DBR-120-24	24V 10A	±1%	150mV	90%	120W
DBR-120-48	48V 2.5A	±1%	200mV	91%	120W
DBR-160-12	12V 13A	±1%	100mV	87%	160W
DBR-160-24	24V 6.7A	±1%	150mV	90%	160W
DBR-160-48	48V 3.3A	±1%	200mV	91%	160W
DBR-200-24S	24V 8.5A	±1%	150mV	90%	200W
DBR-200-36S	36V 5.6A	±1%	150mV	91%	200W
DBR-250-12S	12V 21A	±1%	100mV	87%	250W
DBR-250-24S	24V 11A	±1%	150mV	90%	250W
DBR-250-36S	36V 7A	±1%	150mV	91%	250W
DBR-250-48S	48V 5.2A	±1%	200mV	92%	250W
DBR-360-24S	24V 15A	±1%	150mV	90%	360W
DBR-360-48S	48V 7.5A	±1%	200mV	92%	360W
DBR-500-24FC	24V 21A	±1%	150mV	92%	500W
DBR-500-48FC	48V 10A	±1%	200mV	92%	500W
DBR-960-24FC	24V 40A	±1%	150mV	92%	960W
DBR-960-48FC	48V 20A	±1%	200mV	92%	960W

電壓數顯型 Voltage Digital Display Series



125(H)×100(D)×65(W)mm



125(H)×100(D)×65(W)mm

Model No.	Output	Tol.	R&N	Effi	Power
DBR-75-24V	24V 3A	±1%	150mV	90%	75W
DBR-100-24V	24V 4.2A	±1%	150mV	90%	100W
DBR-120-12V	12V 10A	±1%	100mV	87%	120W
DBR-120-24V	24V 10A	±1%	150mV	90%	120W
DBR-120-48V	48V 2.5A	±1%	200mV	91%	120W
DBR-160-12V	12V 13A	±1%	100mV	87%	160W
DBR-160-24V	24V 6.7A	±1%	150mV	90%	160W
DBR-160-48V	48V 3.3A	±1%	200mV	91%	160W
DBR-200-24SV	24V 8.5A	±1%	150mV	90%	200W
DBR-200-36SV	36V 5.6A	±1%	150mV	91%	200W
DBR-250-12SV	12V 21A	±1%	100mV	87%	250W
DBR-250-24SV	24V 11A	±1%	150mV	90%	250W
DBR-250-36SV	36V 7A	±1%	150mV	91%	250W
DBR-250-48SV	48V 5.2A	±1%	200mV	92%	250W
DBR-360-24SV	24V 15A	±1%	150mV	90%	360W
DBR-360-48SV	48V 7.5A	±1%	200mV	92%	360W
DBR-500-24FCV	24V 21A	±1%	150mV	90%	500W
DBR-500-48FCV	48V 10A	±1%	200mV	92%	500W
DBR-960-24FCV	24V 40A	±1%	150mV	92%	960W
DBR-960-48FCV	48V 20A	±1%	200mV	92%	960W

外形尺寸 Overall dimensions（單位：mm）

- DBR-75-XXX
- DBR-100-XXX
- DBR-120-XXX
- DBR-160-XXX
- NDR-75-XXX
- NDR-100-XXX
- NDR-120-XXX
- NDR-160-XXX
- WDR-120-XXX
- WDR-160-XXX

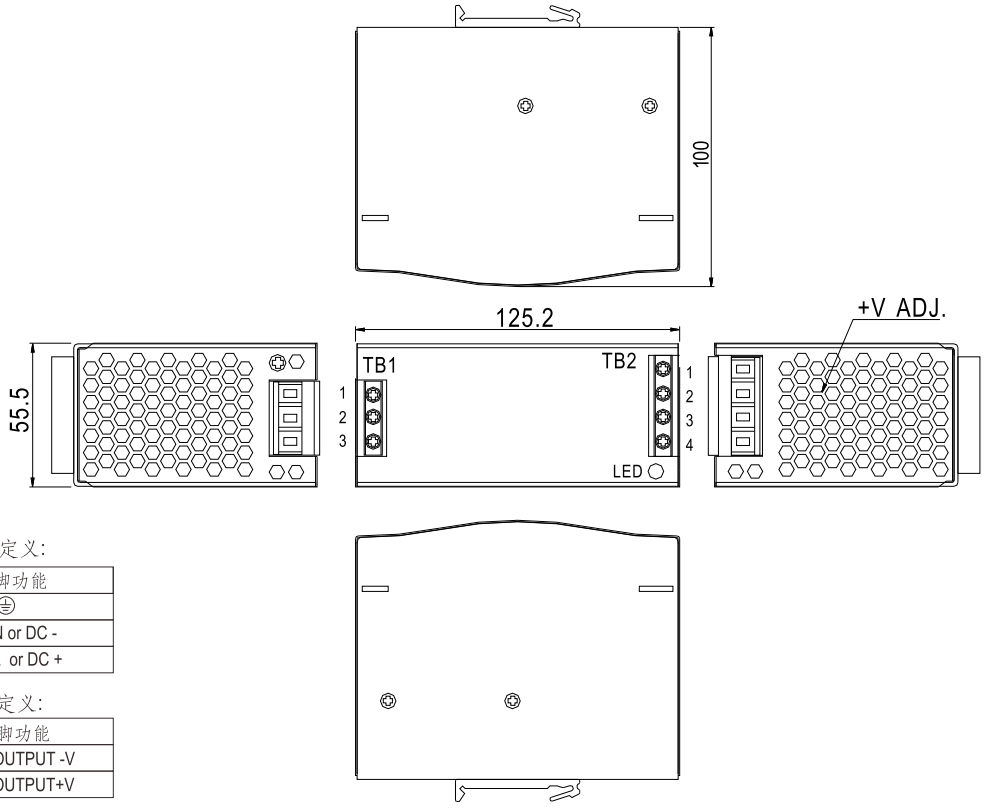

TB1端子脚位定义:

引脚编号	引脚功能
1	FG ⏚
2	AC/N or DC -
3	AC/L or DC +

TB2端子脚位定义:

引脚编号	引脚功能
1,2	DC OUTPUT -V
3,4	DC OUTPUT+V

- DBR-200-XXX
- DBR-250-XXX
- DBR-360-XXX
- NDR-200-XXX
- NDR-250-XXX
- NDR-360-XXX
- WDR-250-XXX
- WDR-360-XXX

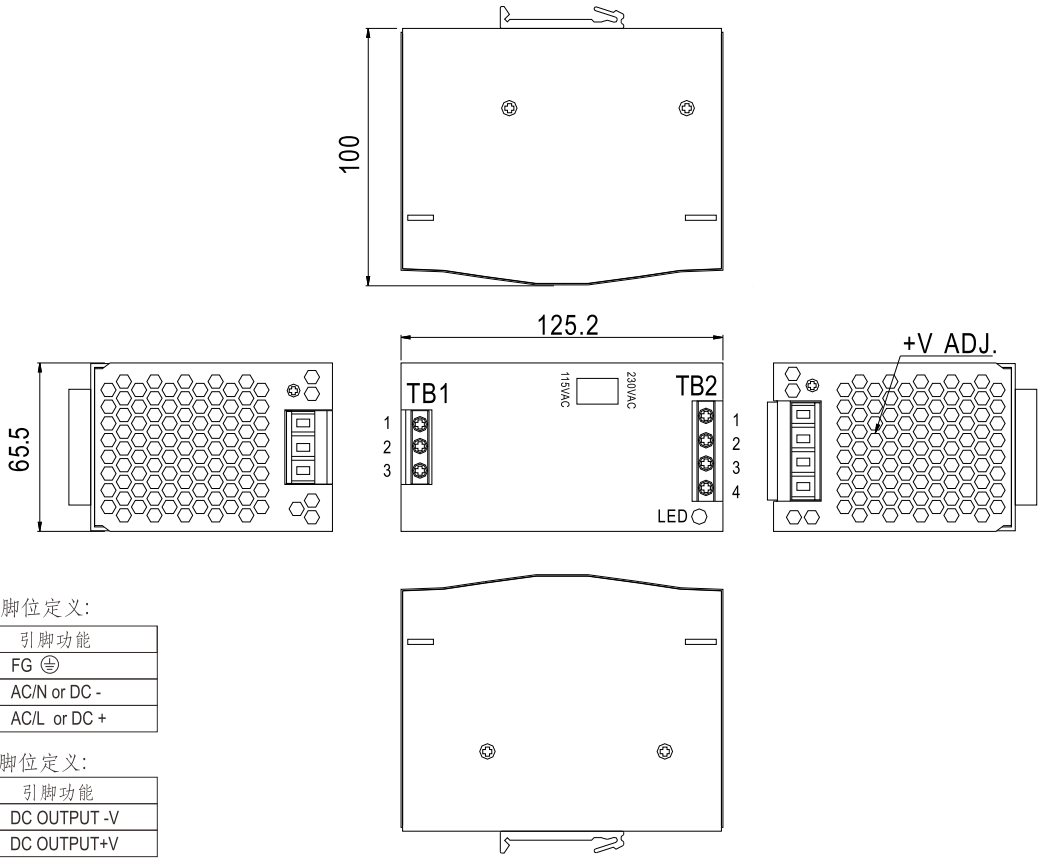

TB1端子脚位定义:

引脚编号	引脚功能
1	FG ⏚
2	AC/N or DC -
3	AC/L or DC +

TB2端子脚位定义:

引脚编号	引脚功能
1,2	DC OUTPUT -V
3,4	DC OUTPUT+V

外形尺寸 Overall dimensions（單位：mm）

- DBR-480-XXX
- DBR-500-XXX
- NDR-480-XXX
- NDR-500-XXX
- SDR-480-XXX
- WDR-480-XXX

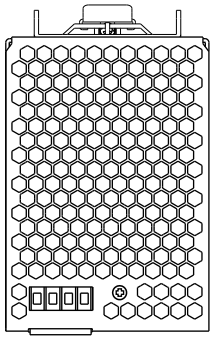

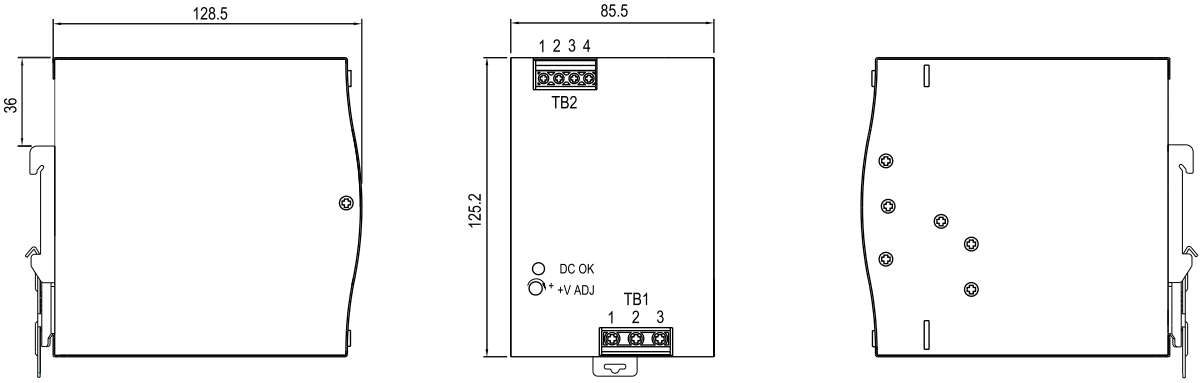

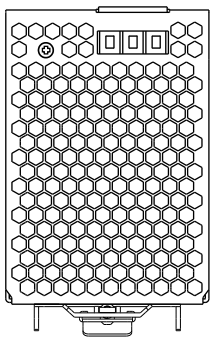

TB1端子脚位定义:

引脚编号	引脚功能
1	FG ⏚
2	AC/N or DC -
3	AC/L or DC +

TB2端子脚位定义:

引脚编号	引脚功能
1,2	DC OUTPUT+V
3,4	DC OUTPUT -V

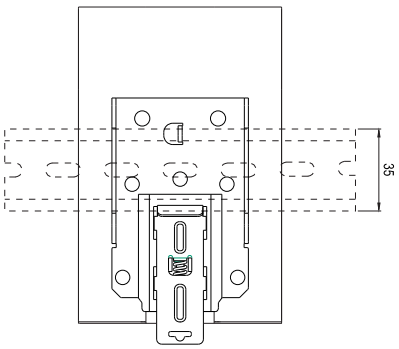

背面图